DES PLAINES PUBLIC LIBRARY RENOVATIONS

1501 ELLINWOOD STREET
DES PLAINES, ILLINOIS 60016

ISSUE FOR BID AND PERMIT

08/14/2015

SCOPE OF WORK

INTERIOR RENOVATIONS ON ALL 4 FLOORS OF THE LIBRARY INCLUDING WALLS, FINISHES, FURNITURE, EQUIPMENT AND EXTERIOR 4TH FLOOR BALCONY RENOVATIONS

BOARD OF LIBRARY TRUSTEES OF THE CITY OF DES PLAINES

OWNER

1501 ELLINWOOD STREET
DES PLAINES IL 60016
847.376.2801 P
847.275.8316 M
Contact: Holly Sorensen, Library Director
hsorensen@dppl.org

LOHAN ANDERSON LLC

ARCHITECT

401 N MICHIGAN, SUITE 500
CHICAGO IL 60611
312.229.6945 P
312.229.6946 F
Contact: Michael C. Barnes, AIA LEED AP
mbarnes@lohananderson.com

CALOR DESIGN GROUP, LTD.

MEP ENGINEERS

2217 NORTH WESTERN AVENUE
CHICAGO IL 60647
773.384.2700 P
773.384.2767 F
Contact: Robert Huston
rhuston@calordesign.com

© COPYRIGHT LOHAN ANDERSON LLC 2015

ARCHITECTURE PLANNING INTERIORS

LOHAN ANDERSON

ABBREVIATIONS

AESS.	ARCHITECTURALLY EXPOSED
S.S.	STRUCTURAL STEEL
A.F.F.	ABOVE FINISHED FLOOR
ACOUS.	ACOUSTIC
ADDL.	ADDITIONAL
ADM.	ADMINISTRATION
A/C	AIR CONDITIONING
ALT.	ALTERNATE
ALUM. / AL.	ALUMINUM
&	AND
∠	ANGLE
APRX.	APPROXIMATE
ARCH.	ARCHITECT(URAL)
ASSIST. OR ASST.	ASSISTANT
@	AT
AV. OR A/V	AUDIOVISUAL
AUTO.	AUTOMATIC
AVG.	AVERAGE
BSMT.	BASEMENT
BP.	BASE PLATE
BM.	BEAM
BETW.	BETWEEN
BITUM.	BITUMINOUS
BLK.	BLOCK
BD.	BOARD
B.B.	BOND BREAKER
B/	BOTTOM OF
BOT.	BOTTOM
BRK.	BRICK
BLDG.	BUILDING
BUS.	BUSINESS
CA.	CAISSON
CAM.	CAISSON MARK
CAB.	CABINET
CAP.	CAPACITY
CPT.	CARPET
C.I.P.	CAST IN PLACE
C.S.	COUNTERSUNK
CLG.	CEILING
CEM.	CEMENT
CTR.	CENTER
℄	CENTER LINE
C.L.	CENTER LINE
CPU.	CENTRAL PROCESSING UNIT
CM	CENTIMETER
CER. TILE	CERAMIC TILE
⊏	CHANNEL
CHEM.	CHEMICAL
CLOS. OR CL.	CLOSET
CLR.	CLEAR
CCTV	CLOSED CIRCUIT TELEVISION
COL.	COLUMN
C.V.T.	COMPRESSIBLE VINYL TILE
COM.	COMPUTER
CMU	CONCRETE MASONRY UNIT
CONC.	CONCRETE
CONSTR.	CONSTRUCTION
CONT.	CONTINUOUS
COP.	COPPER
COR.	CORRIDOR
CRS.	COURSE
X SECT.	CROSS SECTION
CU.	CUBIC
D.L.	DEAD LOAD
dB	DECIBEL
DEG.	DEGREE
DEMO.	DEMOLITION
DEPT.	DEPARTMENT
DET.	DETAIL
DEV.	DEVELOPMENT
DIAG.	DIAGONAL
DIA.	DIAMETER
DIM.	DIMENSION
DIR.	DIRECTOR
DWLS.	DOWELS
DN.	DOWN
D.L.O.	DAY LIGHT OPENING
D.O.	DOOR OPENING
DR.	DRAIN
DWGS.	DRAWINGS
D.F.	DRINKING FOUNTAIN
EA.	EACH
E.F.	EACH FACE
E.W.	EACH WAY
E.	EAST
EDC.	EDUCATION
ELEC.	ELECTRIC, ELECTRICAL
EL.	ELEVATION
ELEV.	ELEVATOR
EMER.	EMERGENCY
ENGR.	ENGINEER
ENTR.	ENTRANCE
EPDM.	ETHYLENE PROPYLENE DIENE MONOMER
EQ.	EQUAL
EQUIV.	EQUIVALENT
EQUIP.	EQUIPMENT
ESCAL.	ESCALATOR
EWC	ELECTRIC WATER COOLER
EVAL.	EVALUATIONS
EXEC.	EXECUTIVE SECRETARY
EXIST. OR ETG.	EXISTING
EXP. JT.	EXPANSION JOINT
EXP. STRUCT.	EXPOSED STRUCTURE
EXT.	EXTERIOR
FB.	FACE BRICK
FOC.	FACE OF CONCRETE
FOF.	FACE OF FINISH
F.S.	FAR SIDE
FT.	FEET
FIG.	FIGURE
FIN.	FINISHED
F.A.	FIRE ALARM
F.E.C.	FIRE EXTINGUISHER CABINET
F.H.	FLATHEAD
F.H.C.	FIRE HOSE CABINET
FHV	FIRE HOSE VALVE
FLR.	FLOOR
F.D.	FLOOR DRAIN
FLOUR.	FLOURESCENT
FOUND. OR FND.	FOUNDATION
FURR.	FURRED, FURRING
FUT.	FUTURE
GA.	GAGE, GAUGE
GAL.	GALLON
GALV.	GALVANIZED
GEN'L	GENERAL
GBD.	GYPSUM BOARD DRYWALL
GFI	GROUND FAULT INTERRUPT
GL. OR GLS.	GLASS
GL. BLK.	GLASS BLOCK
GRFG.	GLASS REINFORCED FIBERGLASS GYPSUM
G.B.	GRADE BEAM
GB.	GRADE BEAM
GR.	GRADE, GRADING
GYP. BD.	GYPSUM BOARD
G.W.B.	GYPSUM WALL BOARD
HDWD.	HARDWOOD
HT.	HEIGHT
HVAC.	HEATING, VENTILATION, AIR CONDITIONING
HGT.	HEIGHT
H.P.	HIGH POINT
H.M.	HOLLOW METAL
HORIZ.	HORIZONTAL
H.B.	HOSE BIB
HR.	HOUR
H.	HIGH
H.V.	HIGH VOLTAGE
IN.	INCH
INF. SYST.	INFORMATION SYSTEMS
INT.	INTERIOR
INCL.	INCLUDED, INCLUDING
I.D.	INSIDE DIAMETER
I.F.	INSUDE FACE
INSUL.	INSULATION
INT.	INTERIOR
INV.	INVERT
JAN.	JANITOR'S
J.C.	JANITOR'S CLOSET
JT.	JOINT
J. BOX	JUNCTION BOX
K.E.	KITCHEN EQUIPMENT
K.E.C.	KITCHEN EQUIPMENT CONTRACTOR
KIT.	KITCHEN
LAB.	LABORATORY
LAM.	LAMINATED, LAMINATE
LAV.	LAVATORY
LRG.	LARGE
LEV.	LEVEL
LIB.	LIBRARY
LT.	LIGHT
LTG.	LIGHTING
LT. WT.	LIGHT WEIGHT
LIN.	LINEAR, LINEAL
L.F.	LINEAR FOOT
L.L.	LIVE LOAD
LLH	LONG LEG HORIZONTAL
LLV	LONG LEG VERTICAL
LKR.	LOCKER
LONG.	LONGITUDINAL
L.P. OR LPT.	LOW POINT
MACH.	MACHINE
MGR.	MANAGER
MAINT.	MAINTENANCE
MKTG.	MARKETING
MDF.	MEDIUM DENSITY FIBERBOARD
M.H.	MANHOLE
MFR.	MANUFACTURER
MFG.	MANUFACTURING
MAS.	MASONRY
M.O.	MASONRY OPENING
MATL.	MATERIAL
MAX.	MAXIMUM
MECH.	MECHANICAL
M.E.P.	MECHANICAL, ELECTRICAL & PLUMBING
MED.	MEDIUM
MEMB.	MEMBRANE
MTL.	METAL
M	METER
MEZZ.	MEZZANINE
MIDPT.	MIDPOINT
MM	MILLIMETER
M'WORK	MILLWORK
MIN.	MINIMUM
MISC.	MISCELLANEOUS
MOD.	MODULE, MODULAR
MTD.	MOUNTED
MUL.	MULLION
N.S.	NEAR SIDE
NOM.	NOMINAL
N.	NORTH
NA.	NOT APPLICABLE
N.I.C.	NOT IN CONTRACT
N.T.S.	NOT TO SCALE
N.W.L.	NORMAL WATER LEVEL
NO. OR #	NUMBER
OFF.	OFFICE
O.C.	ON CENTER
OPNG.	OPENING
OPP.	OPPOSITE
ORIG.	ORIGINAL
O.D.	OUTSIDE DIAMETER
O.F.	OUTSIDE FACE
OZ.	OUNCE
O.H.	OVER HEAD
PNT.	PAINT
PTD.	PAINTED
PR.	PAIR
PNL.	PANEL
P.T.	PART TIME
P.B.	PARTICLE BOARD
P.D.S.	POWER DISTRIBUTION SYSTEM UNIT
PLAS.	PLASTER
P.L.	PLASTIC LAMINATE
ℙ	PLATE
PL. LAM.	PLASTIC LAMINATE
PT.	POINT
P.V.C.	POLYVINYL CHLORIDE
POS.	POSITIVE
LB.	POUND
PSF	POUND PER SQUARE FOOT
PSI	POUND PER SQUARE INCH
PCC.	PRECAST CONCRETE
PREP.	PREPARATION
PRES.	PRESIDENT
PROD.	PRODUCTION
PRO. OR PROG.	PROGRAM
PROJ.	PROJECTION
P.L.	PROPERTY LINE
PURCH.	PURCHASING
PVMT.	PAVEMENT
Q.T.	QUARRY TILE
QUANT.	QUANTITY
RAD.	RADIUS
RECYC.	RECYCLING
REF.	REFERENCE
REFL.	REFLECTED
RE.	REGARD, REGARDING
REF.	REFERENCE
REFGR.	REFRIGERATOR
REINF.	REINFORCED, REINFORCING
REQ'D.	REQUIRED
RESIL.	RESILIENT
REV.	REVISED, REVISION(S)
R.O.W.	RIGHT OF WAY
R.	RISER
R.D.	ROOF DRAIN
RM.	ROOM
R.O.	ROUGH OPENING
SAN.	SANITARY
SCHED.	SCHEDULE
SEAL.	SEALANT
SEC.	SECRETARY
SECT.	SECTION
SHT.	SHEET
S.M.	SHEET METAL
SHWR.	SHOWER
SW.	SIDEWALK
SIM.	SIMILAR
STC	SOUND TRANSMISSION COEFFICIENT
S.	SOUTH
SPEC.	SPECIFICATIONS
SQ.	SQUARE
S.F. OR SQ. FT.	SQUARE FOOT
S.M. OR SQ. M.	SQUARE METER
S.S. OR ST. STL.	STAINLESS STEEL
STD.	STANDARD
STA.	STATION
STL.	STEEL
STOR.	STORAGE
STRUCT.	STRUCTURAL
SUSP.	SUSPENDED
SYMM.	SYMMECTRICAL
TECH.	TECHNICAL
TEL.	TELEPHONE
TV.	TELEVISION
TEMP.	TEMPERATURE
TERR.	TERRAZZO
R.	THERMAL RESISTANCE
THK.	THICKNESS
TOL.	TOLERANCE
T./	TOP OF
TRANS.	TRANSPARENT
T	TREAD
TYP.	TYPICAL
U.L.	UNDERWRITERS LABORATORY
U.N.O.	UNLESS NOTED OTHERWISE
U.P.S.	UNIVERSAL POWER SUPPLY SUPPLY UNIT
UR.	URINAL
V.I.F.	VERIFY IN FIELD
V.W.B.	VINYL WALL BASE
VERT.	VERTICAL
VEST.	VESTIBULE
V.	VOLT
V.P.	VICE PRESIDENT
WSCT.	WAINSCOT
WCA	WALL COVERING A
W.C.	WATER CLOSET
W.P.	WATERPROOFING
WT.	WEIGHT
W.W.F.	WELDED WIRE FABRIC
W.	WEST
WF	WIDE FLANGE
W/	WITH
W/O	WITHOUT
WKSURF.	WORKSURFACE
XS	EXTRA STRONG
XXS	DOUBLE EXTRA STRONG
YD.	YARD
YR.	YEAR
°	DEGREE

NOTES

BUILDING CODE NOTES AS ORIGINALLY DESIGNED:

1. APPLICABLE CODES:
   A. BOCA NATIONAL BUILDING CODE, 1996.
   B. BOCA NATIONAL MECHANICAL CODE, 1996.
   C. BOCA FIRE PREVENTION CODE, 1996.
   D. STATE OF ILLINOIS PLUMBING CODE, 1993.
   E. NATIONAL ELECTRICAL CODE, 1993.
   F. NFPA 101 LIFE SAFETY CODE, 1994.
   G. CABO MODEL ENERGY CODE, 1995.
   H. CITY OF DES PLAINES BUILDING CODE AMENDMENTS.
   I. ILLINOIS ACCESSIBILITY CODE, 1997.

2. BUILDING OCCUPANCY IS "USE GROUP A-3 STRUCTURES" (ASSEMBLY), WITH AN ACCESSORY OCCUPANCY OF "USE GROUP S-1" (MODERATE-HAZARD STORAGE), OCCUPYING LESS THAN 10 PERCENT OF THE ALLOWABLE AREA OF THE FIRST FLOOR (PRIVATE GARAGE).

3. CONSTRUCTION TYPE IS TYPE 2A - PROTECTED NONCOMBUSTIBLE, "IN WHICH THE WALLS, PARTITIONS, STRUCTURE ELEMENTS, FLOORS, CEILINGS, ROOFS AND EXITS ARE CONSTRUCTED OF APPROVED NONCOMBUSTIBLE MATERIALS. EACH STRUCTURE ELEMENT SHALL NOT BE LESS THAN THE REQUIRED FIRERESISTANCE RATING SPECIFIED IN TABLE 602, EXCEPT AS OTHERWISE SPECIFICALLY PROVIDED FOR" IN THE BOCA BUILDING CODE.

4. FIRERESISTANCE RATINGS OF PARTITIONS ARE INDICATED BY THE PARTITION TYPE KEYS ON THE DRAWINGS.

5. FIRERESISTANCE RATINGS (UL LABELS) OF DOORS & FRAMES ARE INDICATED ON THE DOOR SCHEDULE.

BUILDING CODE NOTES FOR 2015 AND 2016 RENOVATION:

1. APPLICABLE CODES
   A. 2012 INTERNATIONAL BUILDING CODE
   B. 2012 INTERNATIONAL MECHANICAL CODE
   C. 2012 INTERNATIONAL FUEL GAS CODE
   D. 2012 INTERNATIONAL FIRE CODE
   E. 2000 NFPA 101 LIFE SAFETY CODE
   F. 2011 NATIONAL ELECTRICAL CODE (NFPA 70)
   G. 2004 STATE OF ILLINOIS PLUMBING CODE
   H. 2012 INTERNATIONAL PROPERTY MAINTENANCE CODE
   I. 2012 ILLINOIS ENERGY CONSERVATION CODE
   J. 2012 AMENDMENTS M-14-14
   K. 2009 ICC A117.1 ACCESSIBILITY CODE/1997 ILLINOIS ACCESSIBILITY CODE

2. RENOVATION WORK DOES NOT INCLUDE MODIFICATIONS TO THE STRUCTURAL FRAME OF THE BUILDING NOR THE MECHANICAL OR ELECTRICAL SERVICE SYSTEMS OF THE EXISTING BUILDING.

KEYS LEGEND

PARTITION IDENTIFICATION:

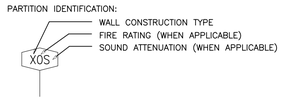

ROOM IDENTIFICATION:

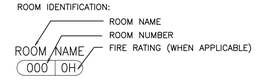

DOOR IDENTIFICATION:

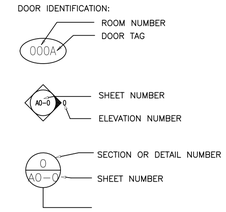

SYMBOLS LEGEND

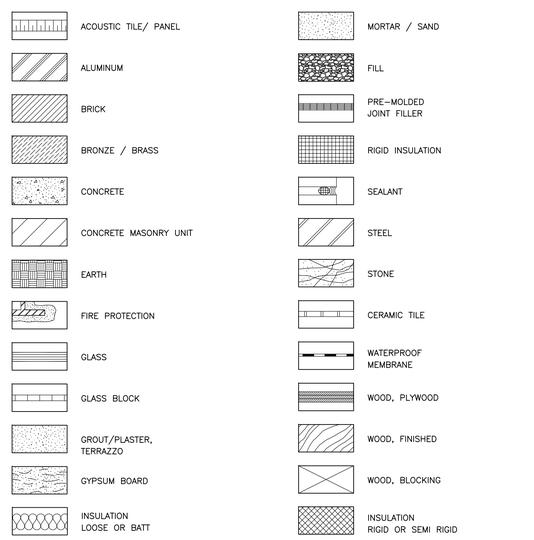

DRAWING INDEX

GENERAL

G0.0	COVER SHEET
G1.0	CODE INFORMATION, DRAWING INDEX, SYMBOLS & LEGEND

ARCHITECTURAL

A2

A2-1.0	1ST FLOOR DEMOLITION PLAN
A2-1.1	1ST FLOOR RENOVATION PLAN
A2-1.2	1ST FLOOR FINISH PLAN
A2-2.0	2ND FLOOR DEMOLITION PLAN
A2-2.1	2ND FLOOR RENOVATION PLAN
A2-2.2	2ND FLOOR FINISH PLAN
A2-3.0	3RD FLOOR DEMOLITION PLAN
A2-3.1	3RD FLOOR RENOVATION PLAN
A2-3.2	3RD FLOOR FINISH PLAN
A2-4.0	4TH FLOOR DEMOLITION PLAN
A2-4.1	4TH FLOOR RENOVATION PLAN
A2-4.2	4TH FLOOR FINISH PLAN

A5

A5-1.0	INTERIOR ELEVATIONS
A5-1.1	INTERIOR ELEVATIONS
A5-1.2	INTERIOR ELEVATIONS
A5-1.3	INTERIOR ELEVATIONS

A6

A6-1.0	1ST FLOOR REFLECTED CEILING PLAN
A6-2.0	2ND FLOOR REFLECTED CEILING PLAN
A6-3.0	3RD FLOOR REFLECTED CEILING PLAN
A6-4.0	4TH FLOOR REFLECTED CEILING PLAN

A8

A8-1.0	4TH FLOOR BALCONY DETAILS

A9

A9-1.0	WALL TYPE DETAILS
A9-2.0	ROOM FINISH SCHEDULE
A9-2.1	FINISH LEGEND AND SPECIFICATION
A9-3.0	DOOR SCHEDULE
A9-3.1	DOOR DETAILS
A9-3.2	GLASS WALL DETAILS
A9-5.0	FIRST FLOOR INTERIOR DETAILS
A9-5.1	INTERIOR DETAILS
A9-5.2	INTERIOR DETAILS

I2

I2-11	1ST FLOOR FURNITURE PLAN
I2-21	2ND FLOOR FURNITURE PLAN
I2-31	3RD FLOOR FURNITURE PLAN
I2-41	4TH FLOOR FURNITURE PLAN

MECHANICAL

MD1.1	1ST FLOOR MECHANICAL PLAN-DEMOLITION
MD1.2	2ND AND 3RD FLOOR MECHANICAL PLAN-DEMOLITION
MD1.3	4TH FLOOR MECHANICAL PLAN-DEMOLITION
M1.1	1ST FLOOR MECHANICAL PLAN-NEW
M1.2	2ND AND 3RD FLOOR MECHANICAL PLAN-NEW
M1.3	4TH FLOOR MECHANICAL PLAN-NEW
M2.1	MECHANICAL SCHEDULES
M3.1	MECHANICAL DETAILS

ELECTRICAL

ED1.1	1ST FLOOR POWER PLAN-DEMOLITION
ED1.2	2ND FLOOR POWER PLAN-DEMOLITION
ED1.3	3RD FLOOR POWER PLAN-DEMOLITION
ED1.4	4TH FLOOR POWER PLAN-DEMOLITION
ED2.1	1ST FLOOR LIGHTING PLAN-DEMOLITION
ED2.2	3RD FLOOR LIGHTING PLAN-DEMOLITION
ED2.3	4TH FLOOR LIGHTING PLAN-DEMOLITION
E1.1	1ST FLOOR POWER PLAN-NEW
E1.2	2ND FLOOR POWER PLAN-NEW
E1.3	3RD FLOOR POWER PLAN-NEW
E1.4	4TH FLOOR POWER PLAN-NEW
E2.1	1ST FLOOR LIGHTING PLAN-NEW
E2.2	2ND FLOOR LIGHTING PLAN-NEW
E2.3	3RD FLOOR LIGHTING PLAN-NEW
E2.4	4TH FLOOR LIGHTING PLAN-NEW
E3.1	ELECTRICAL SYMBOLS
E4.1	ELECTRICAL SCHEDULES
E4.2	ELECTRICAL SCHEDULES
E4.3	ELECTRICAL SCHEDULES

PLUMBING

P1.1	1ST FLOOR PLUMBING PLAN
P1.2	2ND FLOOR PLUMBING PLAN
P1.3	3RD FLOOR PLUMBING PLAN
P2.1	PLUMBING SCHEDULES
P3.1	PLUMBING DETAILS AND SYMBOLS

FIRE PROTECTION

FPD1.1	1ST FLOOR SCHEMATIC FIRE PROTECTION PLAN-DEMOLITION
FPD1.2	3RD FLOOR SCHEMATIC FIRE PROTECTION PLAN-DEMOLITION
FPD1.3	4TH FLOOR SCHEMATIC FIRE PROTECTION PLAN-DEMOLITION
FP1.1	1ST FLOOR SCHEMATIC FIRE PROTECTION PLAN-NEW
FP1.2	3RD FLOOR SCHEMATIC FIRE PROTECTION PLAN-MEW
FP1.3	4th FLOOR SCHEMATIC FIRE PROTECTION PLAN-MEW
FP2.1	FIRE PROTECTION DETAILS

BOARD OF LIBRARY TRUSTEES OF THE CITY OF DES PLAINES, OWNER
1501 ELLINWOOD ST., DES PLAINES, IL 60016

LOHAN ANDERSON, ARCH./INT.
401 N. MICHIGAN AVE., CHICAGO, IL 60611

CALOR DESIGN GROUP, LTD., MEP/FP
2217 N. WESTERN AVE., CHICAGO, IL 60647

C. S. ASSOCIATES, INC., STRUC.
4532 W. 103RD ST., OAK LAWN, IL 60453

REV.	DATE	ISSUE
	14 AUG '15	BID AND PERMIT
	05 MAY '15	DESIGN DEVELOPMENT

DATE SIGNED:

Des Plaines Public Library Renovations

PROJECT NUMBER: 13300

CODE INFORMATION, DRAWING INDEX, SYMBOLS & LEGEND

G1.0

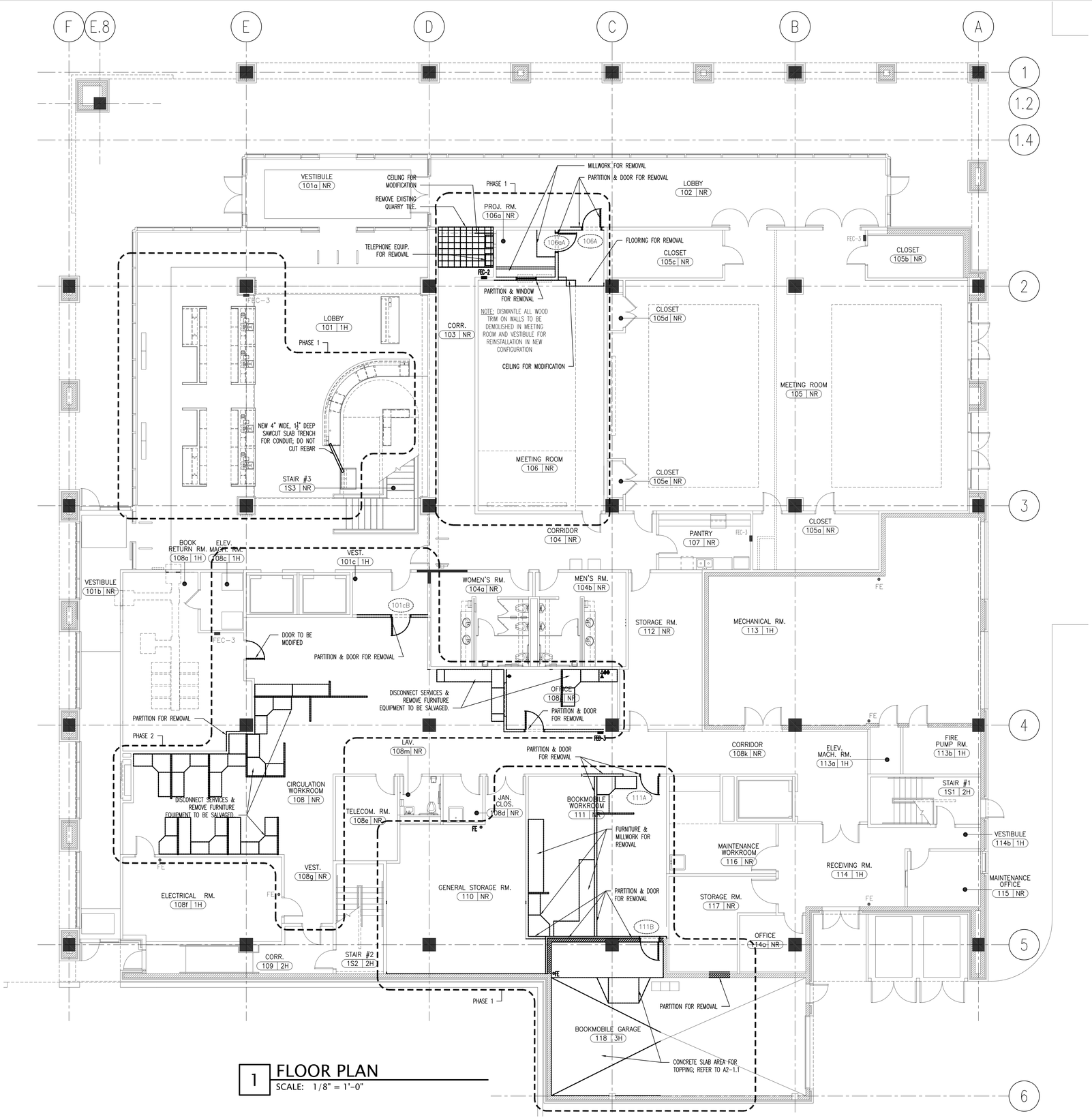

1 FLOOR PLAN
SCALE: 1/8" = 1'-0"

DEMOLITION NOTES

1. REMOVE EXISTING CERAMIC TILE AND BACKER BOARD WHERE NEW TILE IS SCHEDULED FOR INSTALLATION.

2. REPAIR ALL SUBSTRATES AS REQUIRED BY MANUFACTURER OF SCHEDULED NEW FINISHES.

3. REMOVE ALL FLOORING IN AREAS DESIGNATED FOR NEW FLOORING. REFER TO FINISH SERIES DRAWINGS FOR NEW FLOORING SCOPE OF WORK.

4. FURNITURE DESIGNATED TO BE REMOVED SHALL INCLUDE DISCONNECT OF ALL SERVICES. CONTRACTOR TO CONDUCT A WALK THROUGH WITH THE OWNER AND ARCHITECT PRIOR TO REMOVING FURNITURE.

5. REFER TO MEP SHEETS FOR FURTHER DEMOLITION SCOPE.

ARCHITECTURE PLANNING INTERIORS
LOHAN ANDERSON

BOARD OF LIBRARY TRUSTEES OF THE CITY OF DES PLAINES, OWNER
1501 ELLINWOOD ST., DES PLAINES, IL 60016

LOHAN ANDERSON, ARCH./INT.
401 N. MICHIGAN AVE., CHICAGO, IL 60611

CALOR DESIGN GROUP, LTD., MEP/FP
2217 N. WESTERN AVE., CHICAGO, IL 60647

C. S. ASSOCIATES, INC., STRUC.
4532 W. 103RD ST., OAK LAWN, IL 60453

N

REV.	DATE	ISSUE
	14 AUG '15	BID AND PERMIT
	05 MAY '15	DESIGN DEVELOPMENT
	06 MAR '15	SCHEMATIC DESIGN

DATE SIGNED:

Des Plaines Public Library Renovations

PROJECT NUMBER: 13300

1ST FLOOR DEMOLITION PLAN

A2-1.0

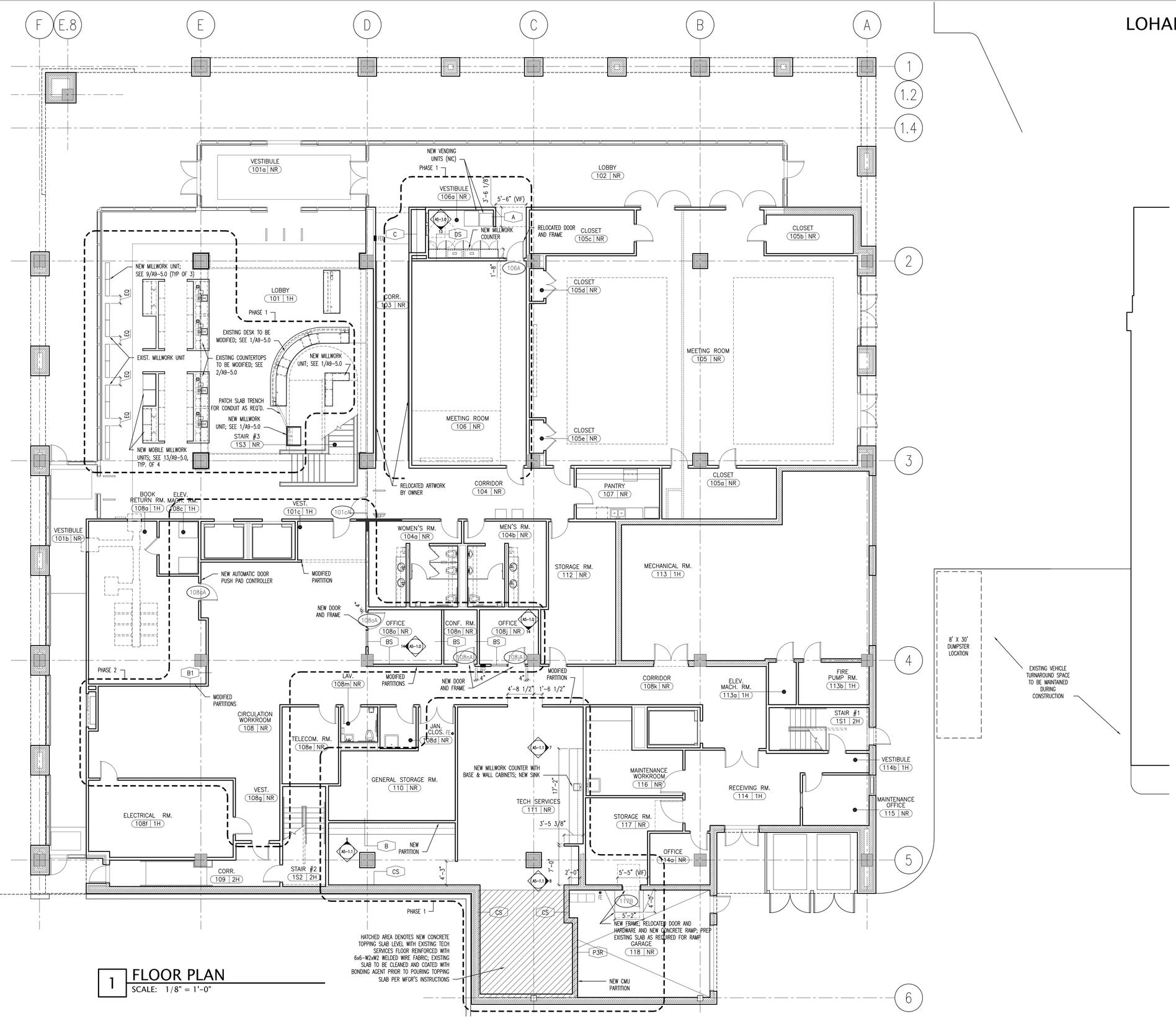

1 FLOOR PLAN
SCALE: 1/8" = 1'-0"

ARCHITECTURE PLANNING INTERIORS
LOHAN ANDERSON

BOARD OF LIBRARY TRUSTEES OF THE CITY OF DES PLAINES, OWNER
1501 ELLINWOOD ST., DES PLAINES, IL 60016

LOHAN ANDERSON, ARCH./INT.
401 N. MICHIGAN AVE., CHICAGO, IL 60611

CALOR DESIGN GROUP, LTD., MEP/FP
2217 N. WESTERN AVE., CHICAGO, IL 60647

C. S. ASSOCIATES, INC., STRUC.
4532 W. 103RD ST., OAK LAWN, IL 60453

REV.	DATE	ISSUE
	14 AUG '15	BID AND PERMIT
	05 MAY '15	DESIGN DEVELOPMENT
	06 MAR '15	SCHEMATIC DESIGN

DATE SIGNED:

Des Plaines Public Library Renovations

PROJECT NUMBER: 13300

1ST FLOOR PLAN

A2-1.1

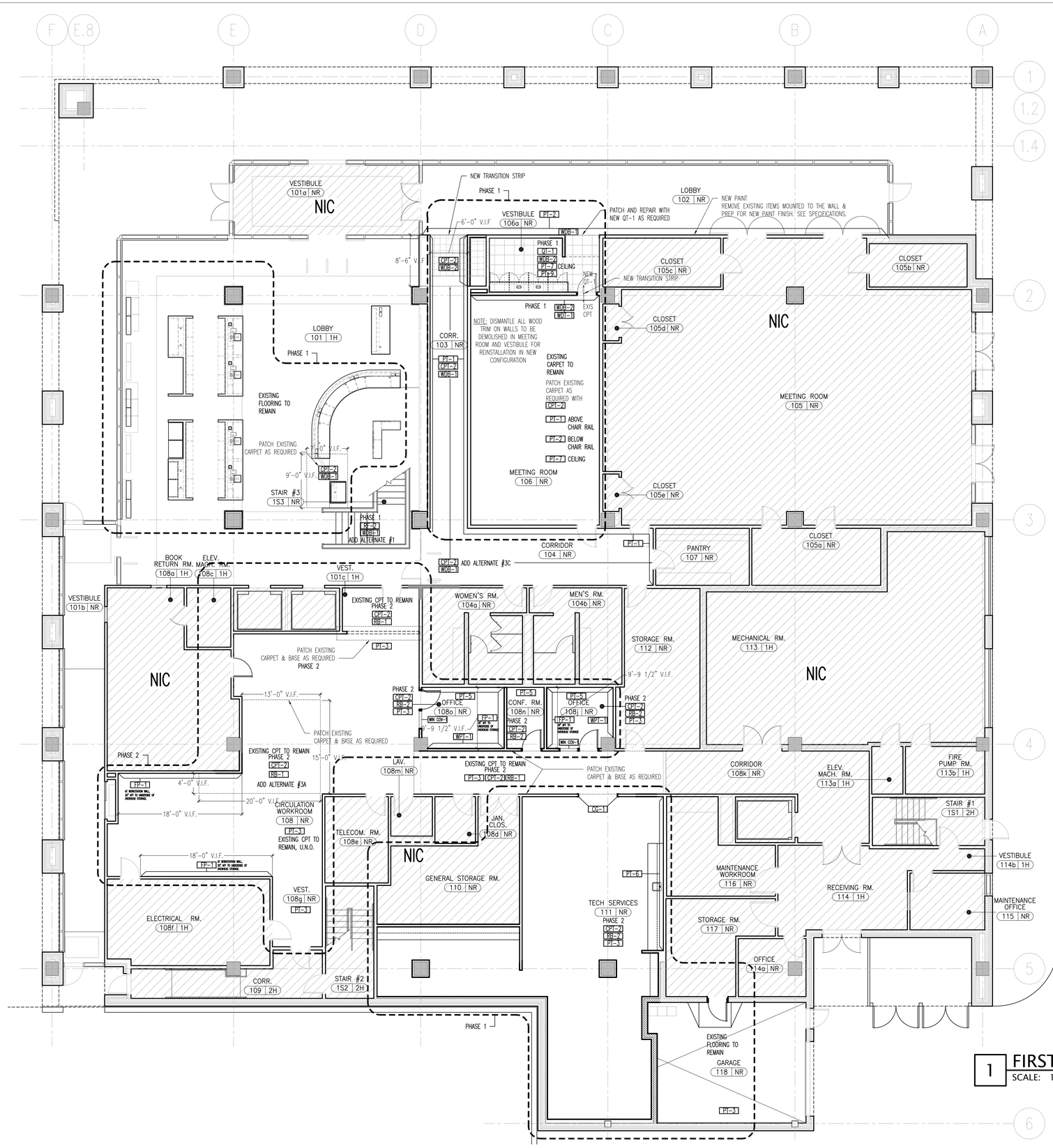

1 FIRST FLOOR FINISH PLAN
SCALE: 1/8" = 1'-0"

ARCHITECTURE PLANNING INTERIORS

LOHAN ANDERSON

GENERAL NOTES

1. PROVIDE FP-1 AT INDICATED WORKSTATIONS FROM DESKTOP TO UNDERSIDE OF OVERHEAD CABINETS; 18"H BY LENGTH INDICATED IN PLAN.

2. REFER TO THE ROOM FINISH SCHEDULE AND FINISH LEGEND SHEET FOR FINISH SELECTIONS.

3. GENERAL CONTRACTOR TO PATCH, REPAIR, AND PREP ALL EXISTING WALLS TO BE PAINTED. REFER TO SPECIFICATIONS AND ROOM FINISH SCHEDULE.

4. PROVIDE (1) COAT OF PRIMER AND (3) COAST OF PAINT AT EACH PARTITION. REFER TO SPECIFICATIONS.

5. GENERAL CONTRACTOR SHALL BE RESPONSIBLE FOR REMOVING EXISTING FLOOR.

6. EXISTING WOOD BASE SHALL REMAIN. PROVIDE NEW AS REQUIRED, WHERE WALLS ARE BEING REMOVED. SALVAGE WOOD BASE AND TRIM FOR REUSE.

BOARD OF LIBRARY TRUSTEES OF THE CITY OF DES PLAINES, OWNER
1501 ELLINWOOD ST., DES PLAINES, IL 60016

LOHAN ANDERSON, ARCH./INT.
401 N. MICHIGAN AVE., CHICAGO, IL 60611

CALOR DESIGN GROUP, LTD., MEP/FP
2217 N. WESTERN AVE., CHICAGO, IL 60647

C. S. ASSOCIATES, INC., STRUC.
4532 W. 103RD ST., OAK LAWN, IL 60453

REV.	DATE	ISSUE
	14 AUG '15	BID AND PERMIT
	03 AUG '15	FFE/FINISH FINAL REVIEW MTG
	02 JULY '15	FFE/FINISH REVIEW MEETING
	05 MAY '15	DESIGN DEVELOPMENT

DATE SIGNED:

Des Plaines Public Library Renovations

PROJECT NUMBER: 13300

1ST FLOOR FINISH PLAN

A2-1.3

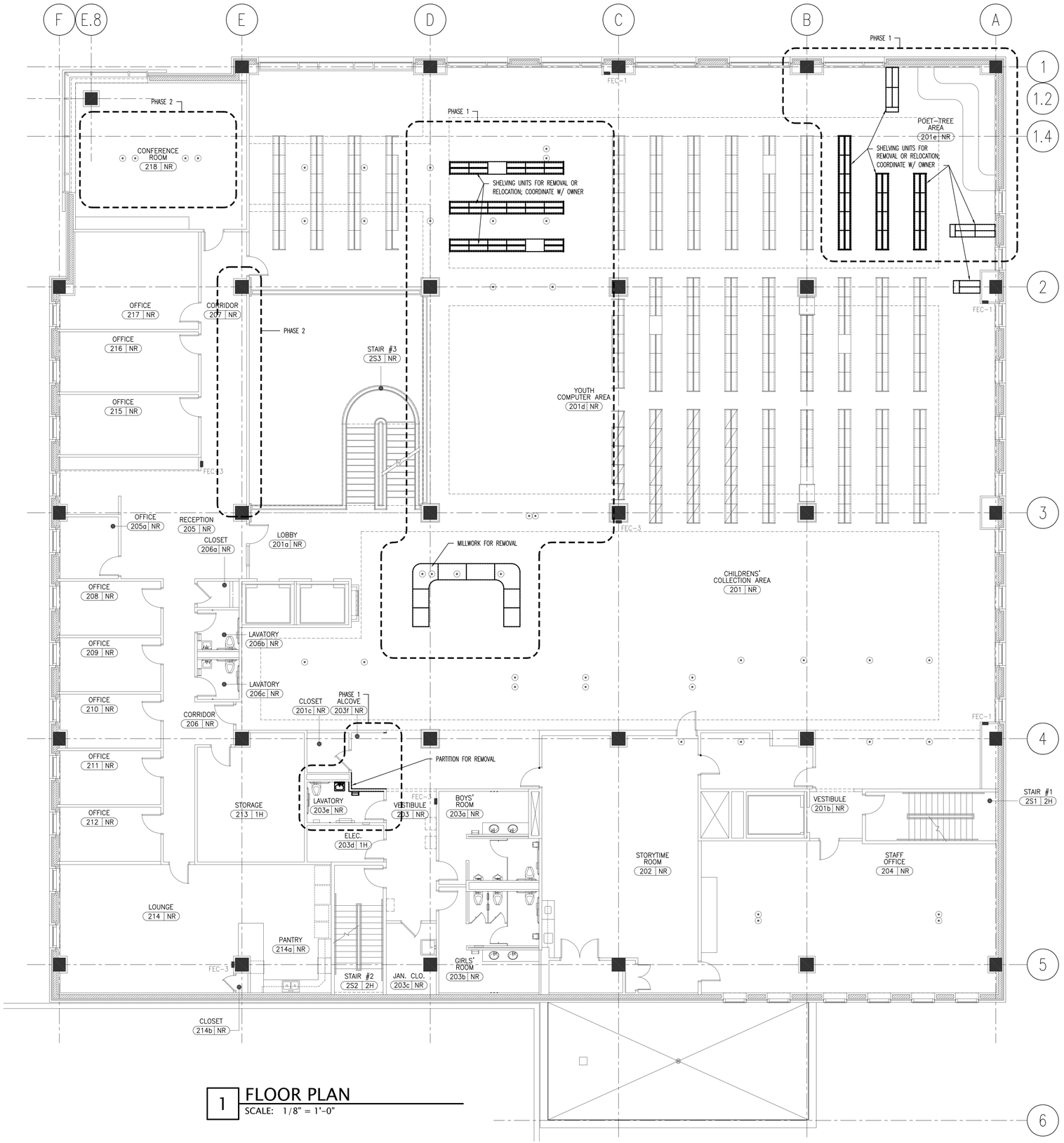

1 FLOOR PLAN
SCALE: 1/8" = 1'-0"

DEMOLITION NOTES

1. REMOVE EXISTING CERAMIC TILE AND BACKER BOARD WHERE NEW TILE IS SCHEDULED FOR INSTALLATION.

2. REPAIR ALL SUBSTRATES AS REQUIRED BY MANUFACTURER OF SCHEDULED NEW FINISHES.

3. REMOVE ALL FLOORING IN AREAS DESIGNATED FOR NEW FLOORING. REFER TO FINISH SERIES DRAWINGS FOR NEW FLOORING SCOPE OF WORK.

4. FURNITURE DESIGNATED TO BE REMOVED SHALL INCLUDE DISCONNECT OF ALL SERVICES. CONTRACTOR TO CONDUCT A WALK THROUGH WITH THE OWNER AND ARCHITECT PRIOR TO REMOVING FURNITURE.

5. REFER TO MEP SHEETS FOR FURTHER DEMOLITION SCOPE.

ARCHITECTURE PLANNING INTERIORS
LOHAN ANDERSON

BOARD OF LIBRARY TRUSTEES OF THE CITY OF DES PLAINES, OWNER
1501 ELLINWOOD ST., DES PLAINES, IL 60016

LOHAN ANDERSON, ARCH./INT.
401 N. MICHIGAN AVE., CHICAGO, IL 60611

CALOR DESIGN GROUP, LTD., MEP/FP
2217 N. WESTERN AVE., CHICAGO, IL 60647

C. S. ASSOCIATES, INC., STRUC.
4532 W. 103RD ST., OAK LAWN, IL 60453

N

REV.	DATE	ISSUE
	14 AUG '15	BID AND PERMIT
	05 MAY '15	DESIGN DEVELOPMENT
	06 MAR '15	SCHEMATIC DESIGN

DATE SIGNED:

Des Plaines Public Library Renovations

PROJECT NUMBER: 13300

2ND FLOOR DEMOLITION PLAN

A2-2.0

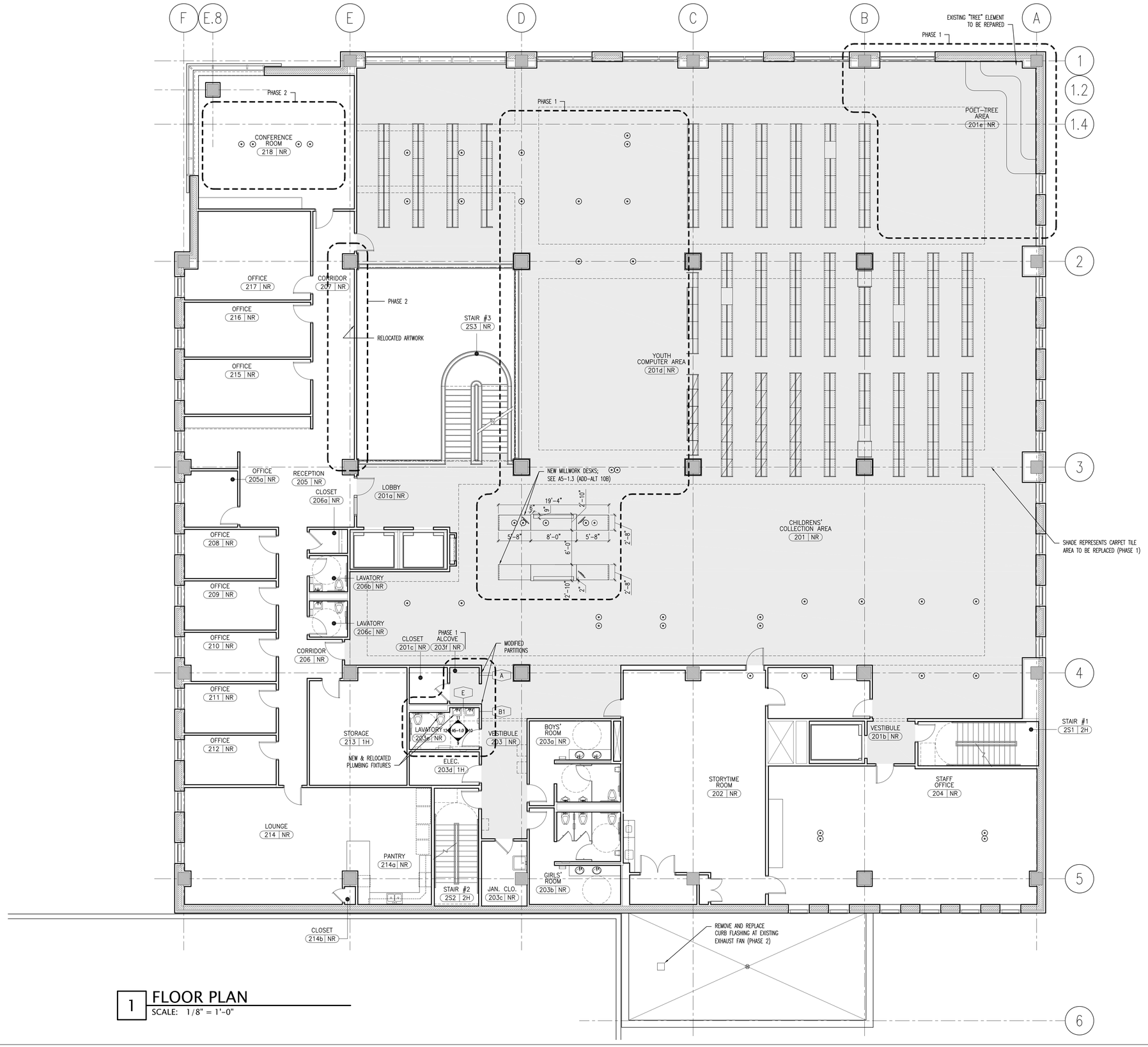

1 FLOOR PLAN
SCALE: 1/8" = 1'-0"

ARCHITECTURE PLANNING INTERIORS
LOHAN ANDERSON

BOARD OF LIBRARY TRUSTEES OF THE CITY OF DES PLAINES, OWNER
1501 ELLINWOOD ST., DES PLAINES, IL 60016

LOHAN ANDERSON, ARCH./INT.
401 N. MICHIGAN AVE., CHICAGO, IL 60611

CALOR DESIGN GROUP, LTD., MEP/FP
2217 N. WESTERN AVE., CHICAGO, IL 60647

C. S. ASSOCIATES, INC., STRUC.
4532 W. 103RD ST., OAK LAWN, IL 60453

REV.	DATE	ISSUE
	14 AUG '15	BID AND PERMIT
	05 MAY '15	DESIGN DEVELOPMENT
	06 MAR '15	SCHEMATIC DESIGN

DATE SIGNED:

Des Plaines Public Library Renovations

PROJECT NUMBER: 13300

2ND FLOOR PLAN

A2-2.1

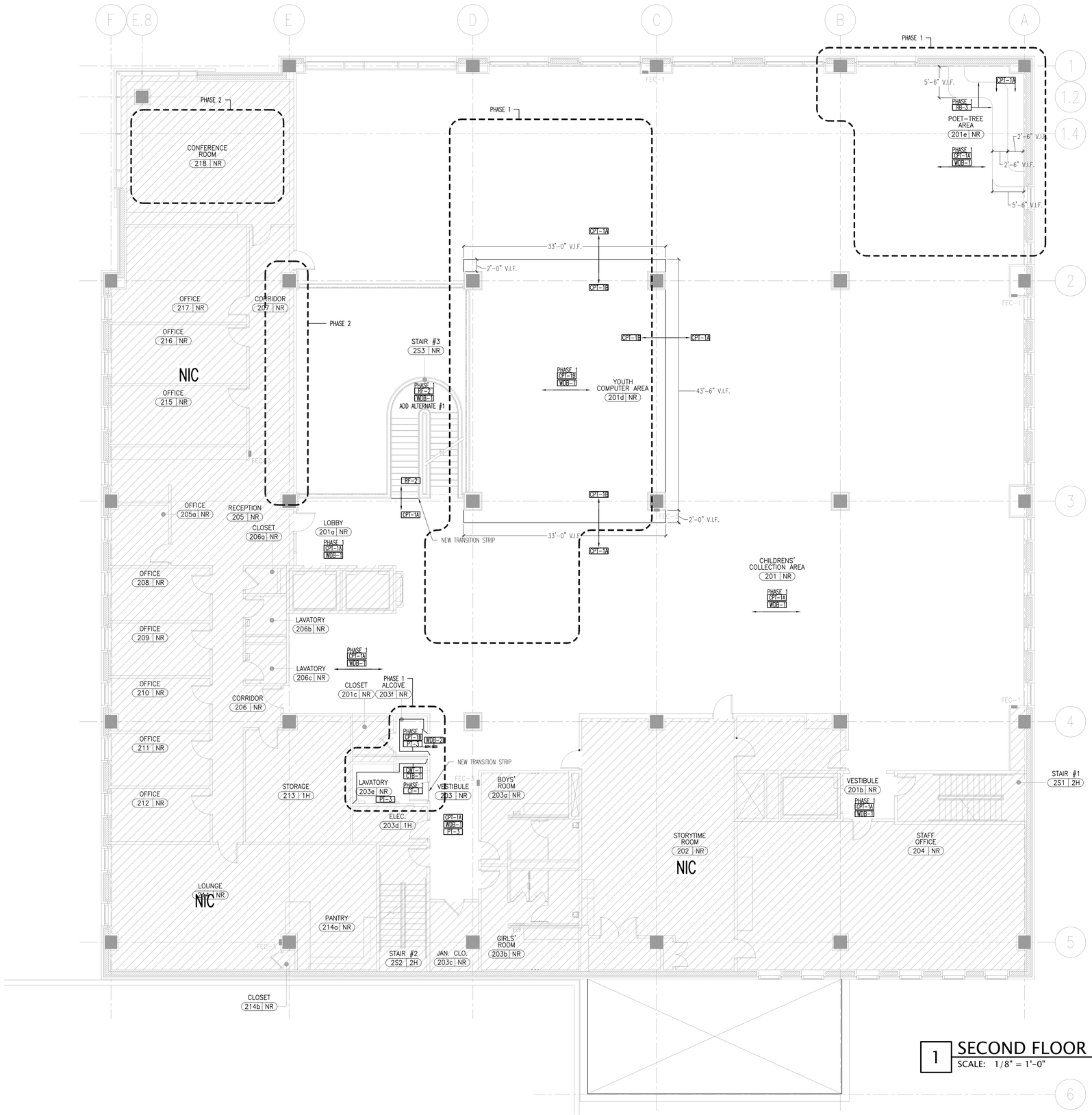

1 SECOND FLOOR FINISH PLAN
SCALE: 1/8" = 1'-0"

ARCHITECTURE PLANNING INTERIORS

LOHAN ANDERSON

GENERAL NOTES

1. PROVIDE FP-1 AT INDICATED WORKSTATIONS FROM DESKTOP TO UNDERSIDE OF OVERHEAD CABINETS; 18"H BY LENGTH INDICATED IN PLAN.

2. REFER TO THE ROOM FINISH SCHEDULE AND FINISH LEGEND SHEET FOR FINISH SELECTIONS.

3. GENERAL CONTRACTOR TO PATCH, REPAIR, AND PREP ALL EXISTING WALLS TO BE PAINTED. REFER TO SPECIFICATIONS AND ROOM FINISH SCHEDULE.

4. PROVIDE (1) COAT OF PRIMER AND (3) COAST OF PAINT AT EACH PARTITION. REFER TO SPECIFICATIONS.

5. GENERAL CONTRACTOR SHALL BE RESPONSIBLE FOR REMOVING EXISTING FLOOR.

6. EXISTING WOOD BASE SHALL REMAIN. PROVIDE NEW AS REQUIRED, WHERE WALLS ARE BEING REMOVED. SALVAGE WOOD BASE AND TRIM FOR REUSE.

BOARD OF LIBRARY TRUSTEES OF THE CITY OF DES PLAINES, OWNER
1501 ELLINWOOD ST., DES PLAINES, IL 60016

LOHAN ANDERSON, ARCH./INT.
401 N. MICHIGAN AVE., CHICAGO, IL 60611

CALOR DESIGN GROUP, LTD., MEP/FP
2217 N. WESTERN AVE., CHICAGO, IL 60647

C. S. ASSOCIATES, INC., STRUC.
4532 W. 103RD ST., OAK LAWN, IL 60453

N

REV.	DATE	ISSUE
	14 AUG '15	BID AND PERMIT
	03 AUG '15	FFE/FINISH FINAL REVIEW MTG
	02 JULY '15	FFE/FINISH REVIEW MEETING
	05 MAY '15	DESIGN DEVELOPMENT

DATE SIGNED:

Des Plaines Public Library Renovations

PROJECT NUMBER: 13300

2ND FLOOR FINISH PLAN

A2-2.3

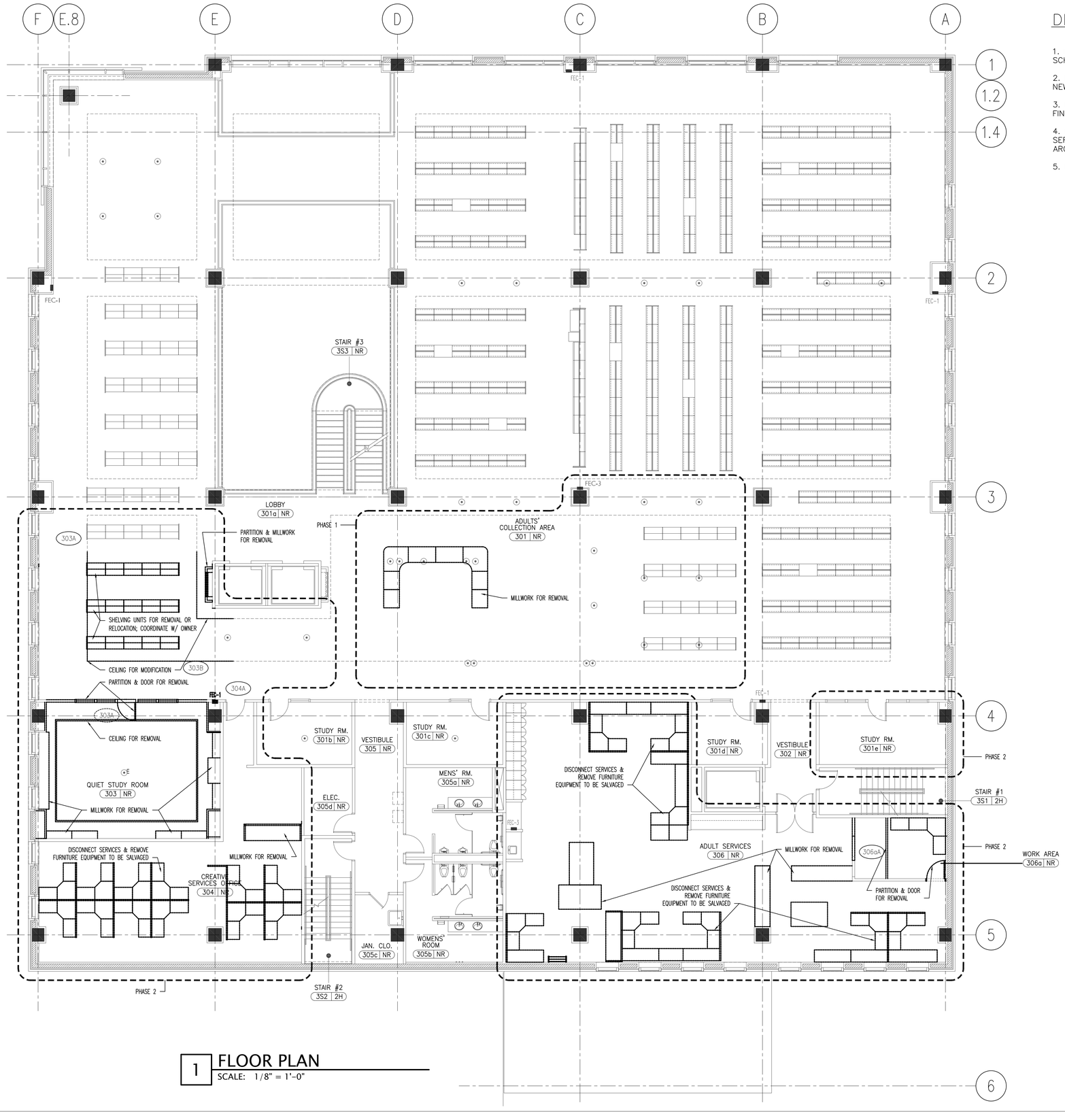

1 FLOOR PLAN
SCALE: 1/8" = 1'-0"

DEMOLITION NOTES

1. REMOVE EXISTING CERAMIC TILE AND BACKER BOARD WHERE NEW TILE IS SCHEDULED FOR INSTALLATION.

2. REPAIR ALL SUBSTRATES AS REQUIRED BY MANUFACTURER OF SCHEDULED NEW FINISHES.

3. REMOVE ALL FLOORING IN AREAS DESIGNATED FOR NEW FLOORING. REFER TO FINISH SERIES DRAWINGS FOR NEW FLOORING SCOPE OF WORK.

4. FURNITURE DESIGNATED TO BE REMOVED SHALL INCLUDE DISCONNECT OF ALL SERVICES. CONTRACTOR TO CONDUCT A WALK THROUGH WITH THE OWNER AND ARCHITECT PRIOR TO REMOVING FURNITURE.

5. REFER TO MEP SHEETS FOR FURTHER DEMOLITION SCOPE.

ARCHITECTURE PLANNING INTERIORS
LOHAN ANDERSON

BOARD OF LIBRARY TRUSTEES OF THE CITY OF DES PLAINES, OWNER
1501 ELLINWOOD ST., DES PLAINES, IL 60016

LOHAN ANDERSON, ARCH./INT.
401 N. MICHIGAN AVE., CHICAGO, IL 60611

CALOR DESIGN GROUP, LTD., MEP/FP
2217 N. WESTERN AVE., CHICAGO, IL 60647

C. S. ASSOCIATES, INC., STRUC.
4532 W. 103RD ST., OAK LAWN, IL 60453

N

REV.	DATE	ISSUE
	14 AUG '15	BID AND PERMIT
	05 MAY '15	DESIGN DEVELOPMENT
	06 MAR '15	SCHEMATIC DESIGN

DATE SIGNED:

Des Plaines Public Library Renovations

PROJECT NUMBER: 13300

3RD FLOOR DEMOLITION PLAN

A2-3.0

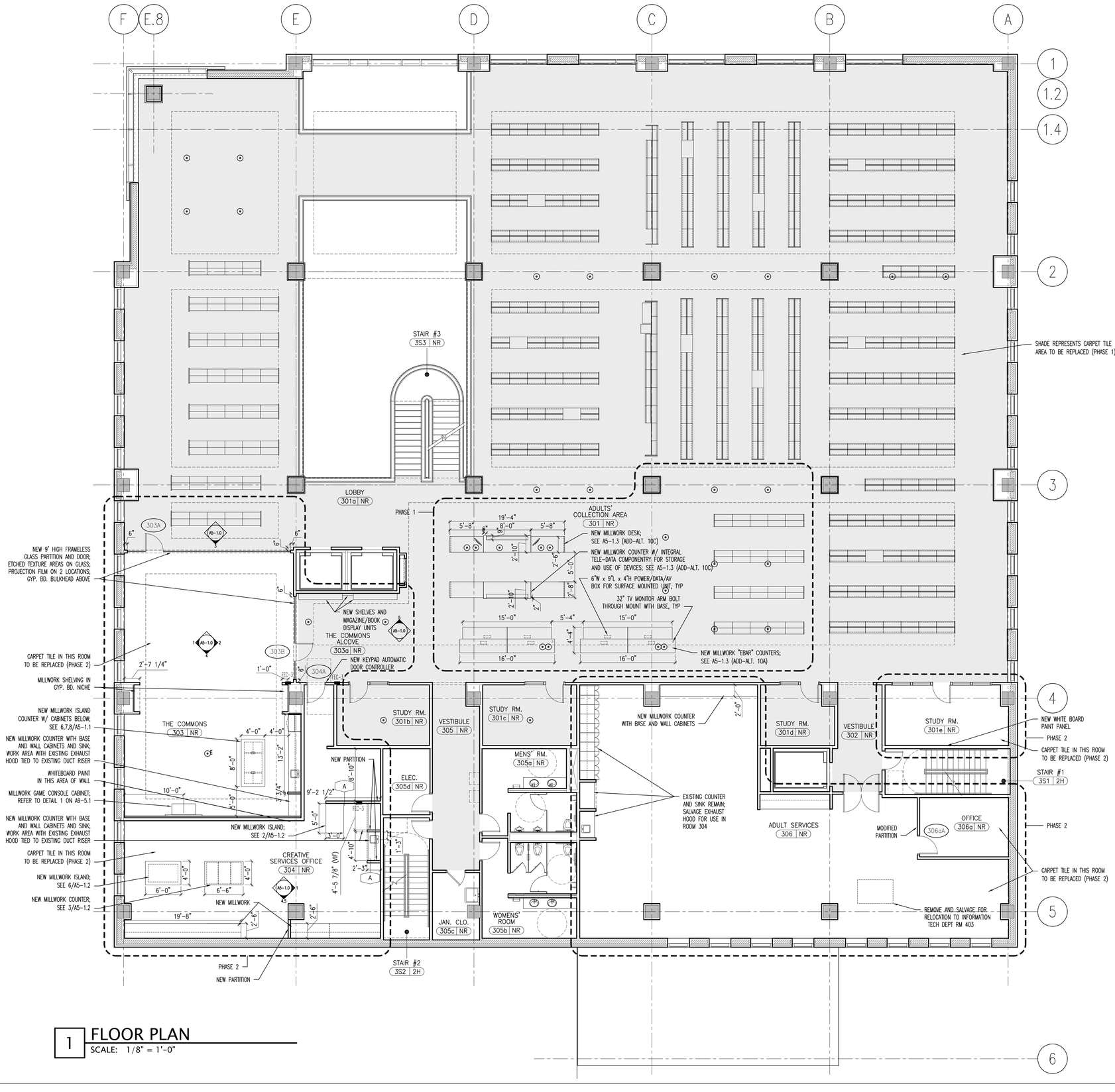

1 FLOOR PLAN
SCALE: 1/8" = 1'-0"

ARCHITECTURE PLANNING INTERIORS
LOHAN ANDERSON

BOARD OF LIBRARY TRUSTEES OF THE CITY OF DES PLAINES, OWNER
1501 ELLINWOOD ST., DES PLAINES, IL 60016

LOHAN ANDERSON, ARCH./INT.
401 N. MICHIGAN AVE., CHICAGO, IL 60611

CALOR DESIGN GROUP, LTD., MEP/FP
2217 N. WESTERN AVE., CHICAGO, IL 60647

C. S. ASSOCIATES, INC., STRUC.
4532 W. 103RD ST., OAK LAWN, IL 60453

REV.	DATE	ISSUE
	14 AUG '15	BID AND PERMIT
	05 MAY '15	DESIGN DEVELOPMENT
	06 MAR '15	SCHEMATIC DESIGN

DATE SIGNED:

Des Plaines Public Library Renovations

PROJECT NUMBER: 13300

3RD FLOOR PLAN

A2-3.1

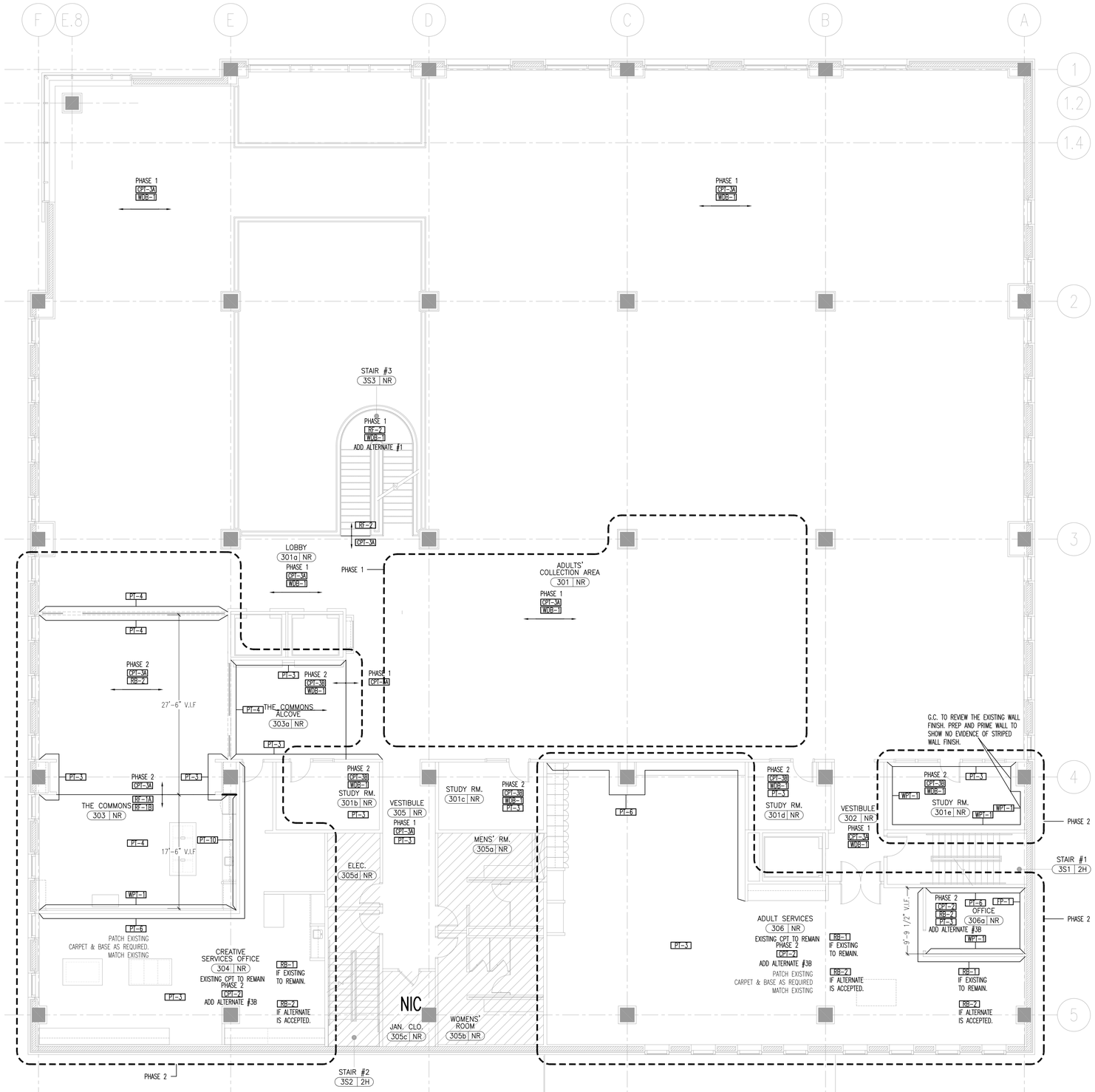

1 THIRD FLOOR FINISH PLAN
SCALE: 1/8" = 1'-0"

ARCHITECTURE PLANNING INTERIORS

LOHAN ANDERSON

GENERAL NOTES

1. PROVIDE FP-1 AT INDICATED WORKSTATIONS FROM DESKTOP TO UNDERSIDE OF OVERHEAD CABINETS; 18"H BY LENGTH INDICATED IN PLAN.

2. REFER TO THE ROOM FINISH SCHEDULE AND FINISH LEGEND SHEET FOR FINISH SELECTIONS.

3. GENERAL CONTRACTOR TO PATCH, REPAIR, AND PREP ALL EXISTING WALLS TO BE PAINTED. REFER TO SPECIFICATIONS AND ROOM FINISH SCHEDULE.

4. PROVIDE (1) COAT OF PRIMER AND (3) COAST OF PAINT AT EACH PARTITION. REFER TO SPECIFICATIONS.

5. GENERAL CONTRACTOR SHALL BE RESPONSIBLE FOR REMOVING EXISTING FLOOR.

6. EXISTING WOOD BASE SHALL REMAIN. PROVIDE NEW AS REQUIRED, WHERE WALLS ARE BEING REMOVED. SALVAGE WOOD BASE AND TRIM FOR REUSE.

BOARD OF LIBRARY TRUSTEES OF THE CITY OF DES PLAINES, OWNER
1501 ELLINWOOD ST., DES PLAINES, IL 60016

LOHAN ANDERSON, ARCH./INT.
401 N. MICHIGAN AVE., CHICAGO, IL 60611

CALOR DESIGN GROUP, LTD., MEP/FP
2217 N. WESTERN AVE., CHICAGO, IL 60647

C. S. ASSOCIATES, INC., STRUC.
4532 W. 103RD ST., OAK LAWN, IL 60453

N

REV.	DATE	ISSUE
	14 AUG '15	BID AND PERMIT
	03 AUG '15	FFE/FINISH FINAL REVIEW MTG
	02 JULY '15	FFE/FINISH REVIEW MEETING
	05 MAY '15	DESIGN DEVELOPMENT

DATE SIGNED:

Des Plaines Public Library Renovations

PROJECT NUMBER: 13300

3RD FLOOR FINISH PLAN

A2-3.3

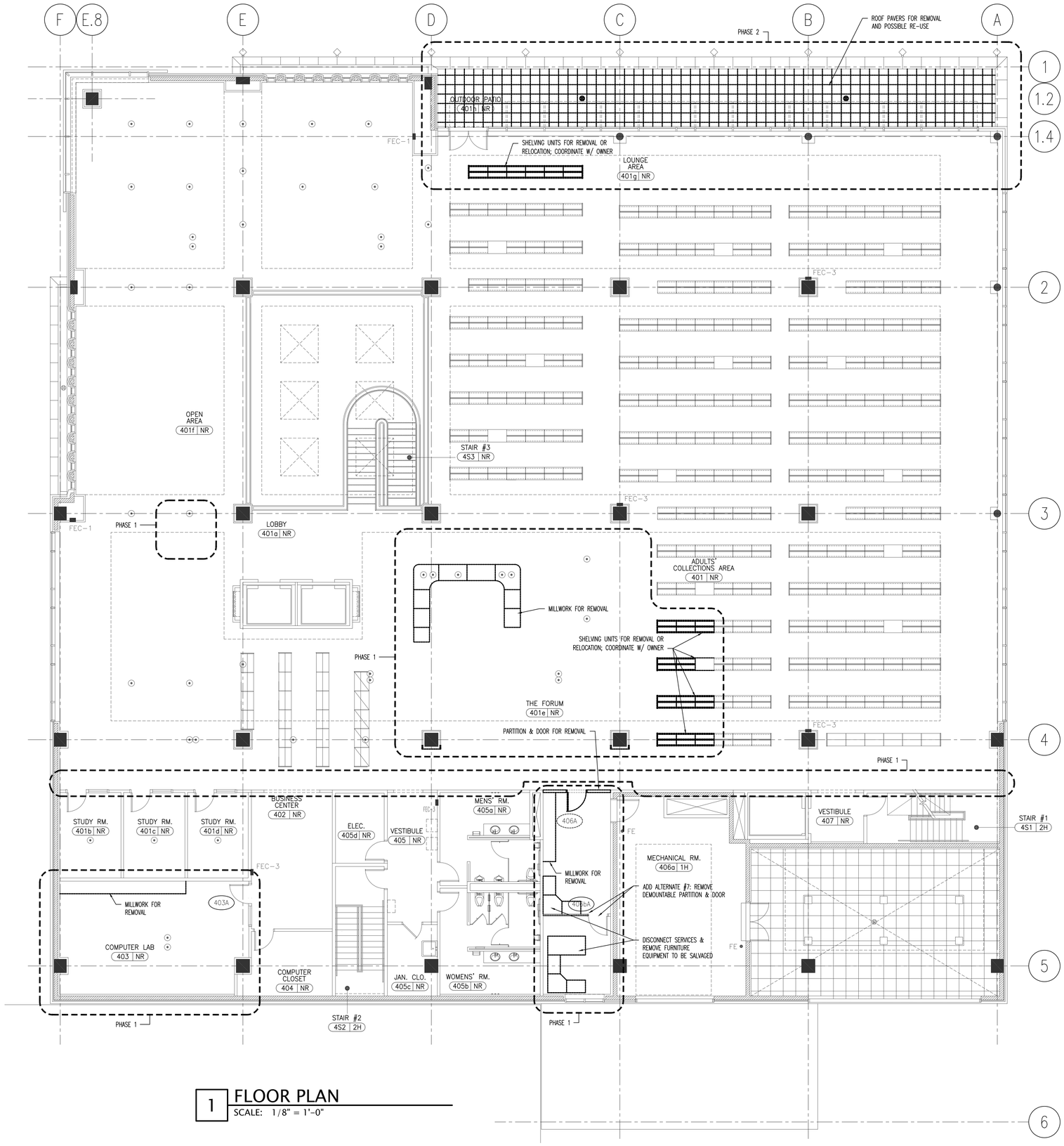

1 FLOOR PLAN
SCALE: 1/8" = 1'-0"

DEMOLITION NOTES

1. REMOVE EXISTING CERAMIC TILE AND BACKER BOARD WHERE NEW TILE IS SCHEDULED FOR INSTALLATION.

2. REPAIR ALL SUBSTRATES AS REQUIRED BY MANUFACTURER OF SCHEDULED NEW FINISHES.

3. REMOVE ALL FLOORING IN AREAS DESIGNATED FOR NEW FLOORING. REFER TO FINISH SERIES DRAWINGS FOR NEW FLOORING SCOPE OF WORK.

4. FURNITURE DESIGNATED TO BE REMOVED SHALL INCLUDE DISCONNECT OF ALL SERVICES. CONTRACTOR TO CONDUCT A WALK THROUGH WITH THE OWNER AND ARCHITECT PRIOR TO REMOVING FURNITURE.

5. REFER TO MEP SHEETS FOR FURTHER DEMOLITION SCOPE.

ARCHITECTURE PLANNING INTERIORS
LOHAN ANDERSON

BOARD OF LIBRARY TRUSTEES OF THE CITY OF DES PLAINES, OWNER
1501 ELLINWOOD ST., DES PLAINES, IL 60016

LOHAN ANDERSON, ARCH./INT.
401 N. MICHIGAN AVE., CHICAGO, IL 60611

CALOR DESIGN GROUP, LTD., MEP/FP
2217 N. WESTERN AVE., CHICAGO, IL 60647

C. S. ASSOCIATES, INC., STRUC.
4532 W. 103RD ST., OAK LAWN, IL 60453

N

REV.	DATE	ISSUE
	14 AUG '15	BID AND PERMIT
	05 MAY '15	DESIGN DEVELOPMENT
	06 MAR '15	SCHEMATIC DESIGN

DATE SIGNED:

Des Plaines Public Library Renovations

PROJECT NUMBER: 13300

4TH FLOOR DEMOLITION PLAN

A2-4.0

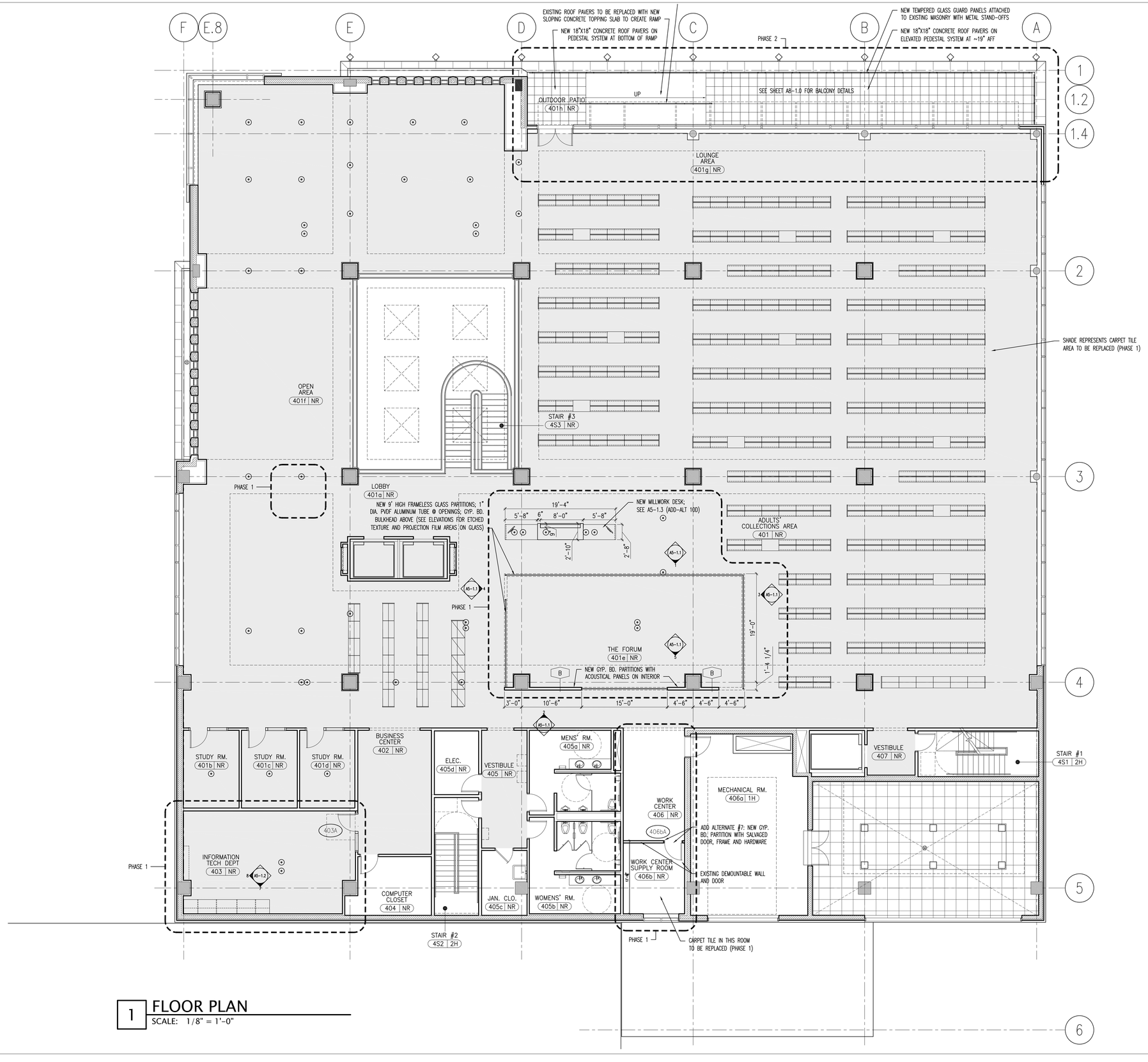

1 FLOOR PLAN
SCALE: 1/8" = 1'-0"

ARCHITECTURE PLANNING INTERIORS
LOHAN ANDERSON

BOARD OF LIBRARY TRUSTEES OF THE CITY OF DES PLAINES, OWNER
1501 ELLINWOOD ST., DES PLAINES, IL 60016

LOHAN ANDERSON, ARCH./INT.
401 N. MICHIGAN AVE., CHICAGO, IL 60611

CALOR DESIGN GROUP, LTD., MEP/FP
2217 N. WESTERN AVE., CHICAGO, IL 60647

C. S. ASSOCIATES, INC., STRUC.
4532 W. 103RD ST., OAK LAWN, IL 60453

REV.	DATE	ISSUE
	14 AUG '15	BID AND PERMIT
	05 MAY '15	DESIGN DEVELOPMENT
	06 MAR '15	SCHEMATIC DESIGN

DATE SIGNED:

Des Plaines Public Library Renovations

PROJECT NUMBER: 13300

4TH FLOOR PLAN

A2-4.1

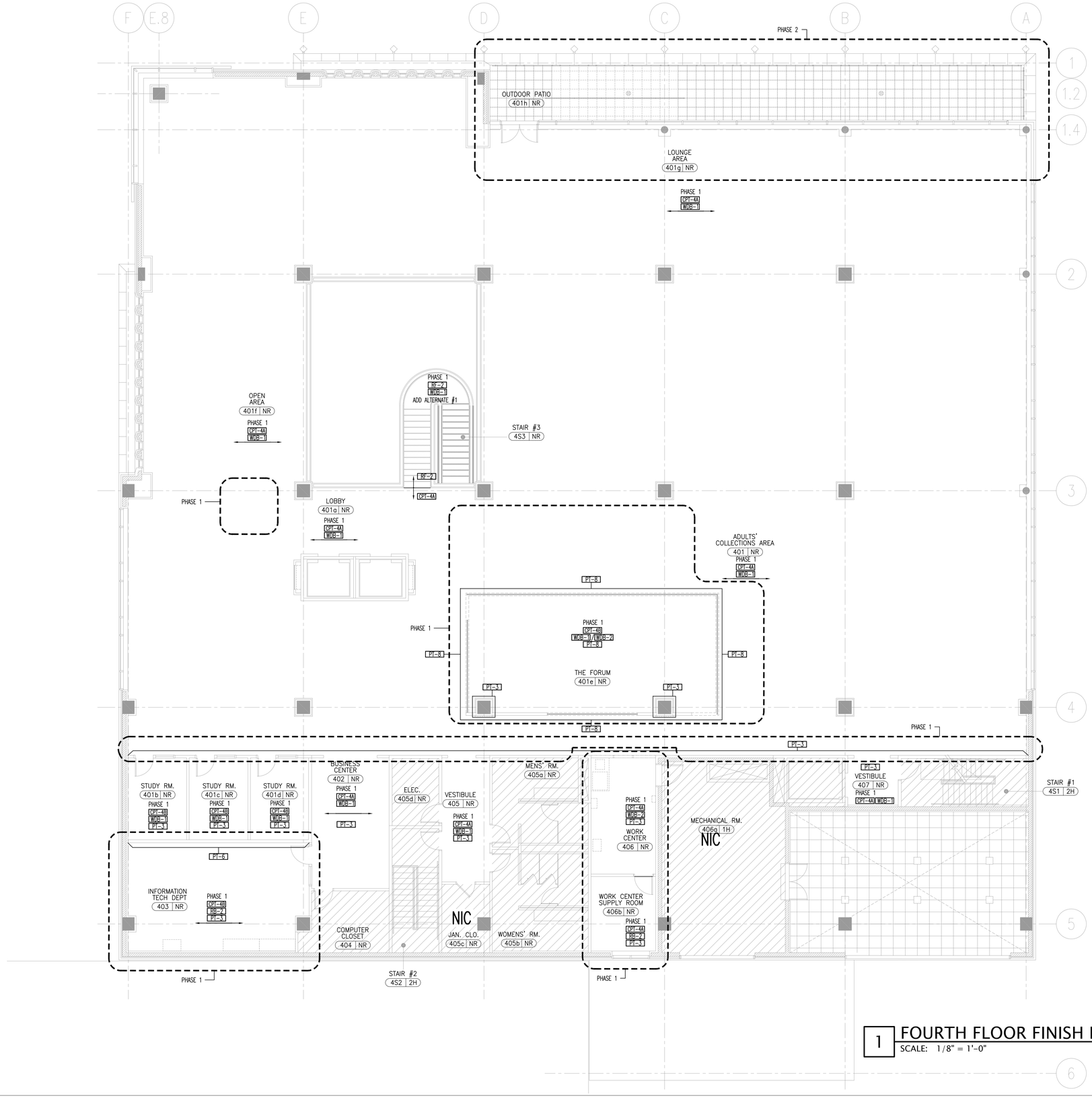

1 FOURTH FLOOR FINISH PLAN
SCALE: 1/8" = 1'-0"

ARCHITECTURE PLANNING INTERIORS

LOHAN ANDERSON

GENERAL NOTES

1. PROVIDE FP-1 AT INDICATED WORKSTATIONS FROM DESKTOP TO UNDERSIDE OF OVERHEAD CABINETS; 18"H BY LENGTH INDICATED IN PLAN.

2. REFER TO THE ROOM FINISH SCHEDULE AND FINISH LEGEND SHEET FOR FINISH SELECTIONS.

3. GENERAL CONTRACTOR TO PATCH, REPAIR, AND PREP ALL EXISTING WALLS TO BE PAINTED. REFER TO SPECIFICATIONS AND ROOM FINISH SCHEDULE.

4. PROVIDE (1) COAT OF PRIMER AND (3) COAST OF PAINT AT EACH PARTITION. REFER TO SPECIFICATIONS.

5. GENERAL CONTRACTOR SHALL BE RESPONSIBLE FOR REMOVING EXISTING FLOOR.

6. EXISTING WOOD BASE SHALL REMAIN. PROVIDE NEW AS REQUIRED, WHERE WALLS ARE BEING REMOVED. SALVAGE WOOD BASE AND TRIM FOR REUSE.

BOARD OF LIBRARY TRUSTEES OF THE CITY OF DES PLAINES, OWNER
1501 ELLINWOOD ST., DES PLAINES, IL 60016

LOHAN ANDERSON, ARCH./INT.
401 N. MICHIGAN AVE., CHICAGO, IL 60611

CALOR DESIGN GROUP, LTD., MEP/FP
2217 N. WESTERN AVE., CHICAGO, IL 60647

C. S. ASSOCIATES, INC., STRUC.
4532 W. 103RD ST., OAK LAWN, IL 60453

N

REV.	DATE	ISSUE
	14 AUG '15	BID AND PERMIT
	03 AUG '15	FFE/FINISH FINAL REVIEW MTG
	02 JULY '15	FFE/FINISH REVIEW MEETING
	05 MAY '15	DESIGN DEVELOPMENT

DATE SIGNED:

Des Plaines Public Library Renovations

PROJECT NUMBER: 13300

4TH FLOOR FINISH PLAN

A2-4.3

ARCHITECTURE PLANNING INTERIORS
LOHAN ANDERSON

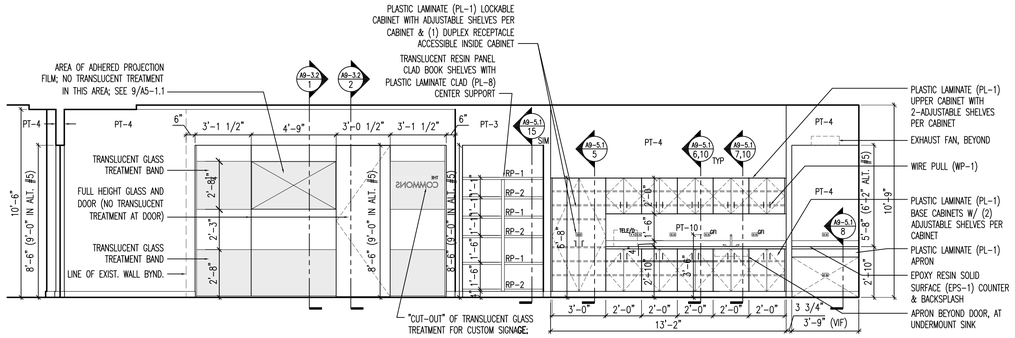

2 ELEVATION — EAST INTERIOR
SCALE: 1/4" = 1'-0"

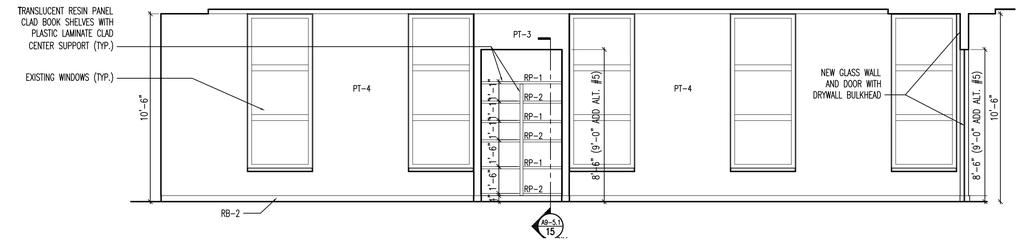

1 ELEVATION — WEST INTERIOR
SCALE: 1/4" = 1'-0"

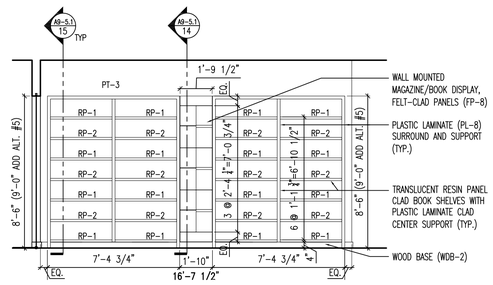

5 ELEVATION — SOUTH INTERIOR
SCALE: 1/4" = 1'-0"

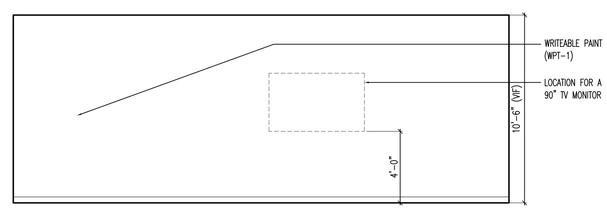

4 ELEVATION — NORTH EXTERIOR
SCALE: 1/4" = 1'-0"

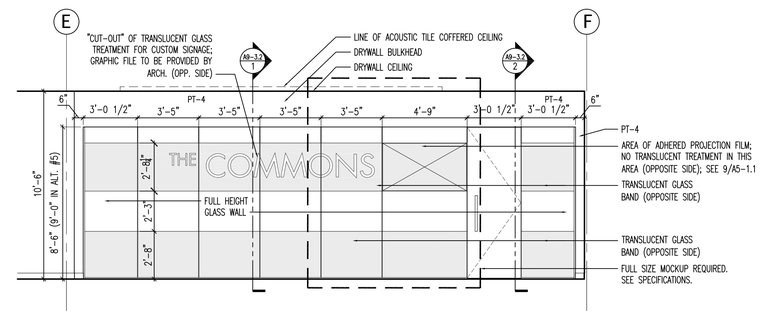

3 ELEVATION — NORTH EXTERIOR
SCALE: 1/4" = 1'-0"

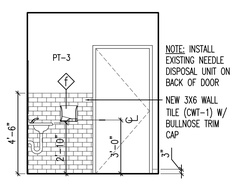

10 ELEVATION — RM. 203e EAST WALL
SCALE: 1/4" = 1'-0"

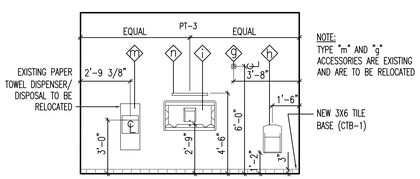

9 ELEVATION — RM. 203e SOUTH WALL
SCALE: 1/4" = 1'-0"

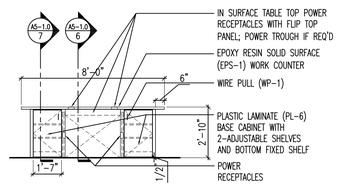

8 ELEVATION — CRAFT TABLE
SCALE: 1/4" = 1'-0"

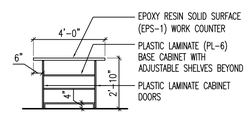

7 ELEVATION — CRAFT TABLE END PANELS
SCALE: 1/4" = 1'-0"

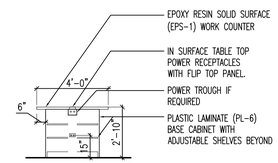

6 ELEVATION — CRAFT TABLE INTERIOR PANELS
SCALE: 1/4" = 1'-0"

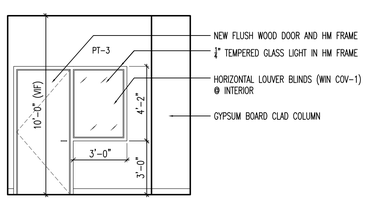

14 ELEVATION — RM. 108J ENTRY WALL (ROOM 108o SIMILAR)
SCALE: 1/4" = 1'-0"

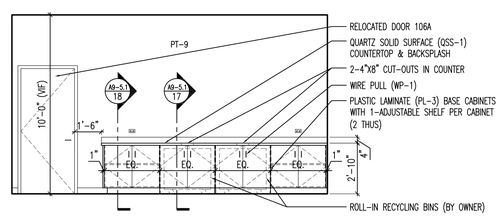

13 ELEVATION — RM. 106a SOUTH WALL
SCALE: 1/4" = 1'-0"

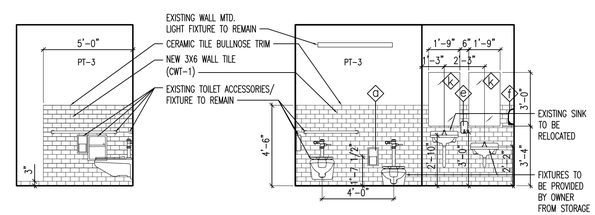

12 ELEVATION — RM. 203e WEST WALL
SCALE: 1/4" = 1'-0"

11 ELEVATION — RM. 203e NORTH WALL
SCALE: 1/4" = 1'-0"

BOARD OF LIBRARY TRUSTEES OF THE CITY OF DES PLAINES, OWNER
1501 ELLINWOOD ST., DES PLAINES, IL 60016

LOHAN ANDERSON, ARCH./INT.
401 N. MICHIGAN AVE., CHICAGO, IL 60611

CALOR DESIGN GROUP, LTD., MEP/FP
2217 N. WESTERN AVE., CHICAGO, IL 60647

C. S. ASSOCIATES, INC., STRUC.
4532 W. 103RD ST., OAK LAWN, IL 60453

TOILET ACCESSORIES:

- (a) SINGLE-ROLL TOILET TISSUE DISPENSER: SURFACE MOUNTED
- (b) SANITARY NAPKIN DISPOSAL; SURFACE MTD.
- (c) COMBINATION SANITARY NAPKIN/ TAMPON VENDOR; RECESSED
- (d) GRAB BARS; ONE PAIR PER HANDICAPPED STALL
- (e) SOAP DISPENSER; WALL MOUNTED
- (f) WARM AIR HAND DRYER, SURFACE MOUNTED
- (g) COAT HOOK
- (h) CHILD PROTECTION SEAT
- (i) BABY CHANGING STATION
- (k) MIRROR WITH S.S. FRAME/SHELF
- (l) NOT USED
- (m) COMBINATION TOWEL DISPENSER/ WASTE RECEPTACLE; RECESSED
- (n) FIXED S.S. SHELF

REV.	DATE	ISSUE
	14 AUG '15	BID AND PERMIT
	05 MAY '15	DESIGN DEVELOPMENT

DATE SIGNED:

Des Plaines Public Library Renovations

PROJECT NUMBER: 13300

ROOM 106a 203e AND 303 ELEVATIONS

A5-1.0

ARCHITECTURE PLANNING INTERIORS
LOHAN ANDERSON

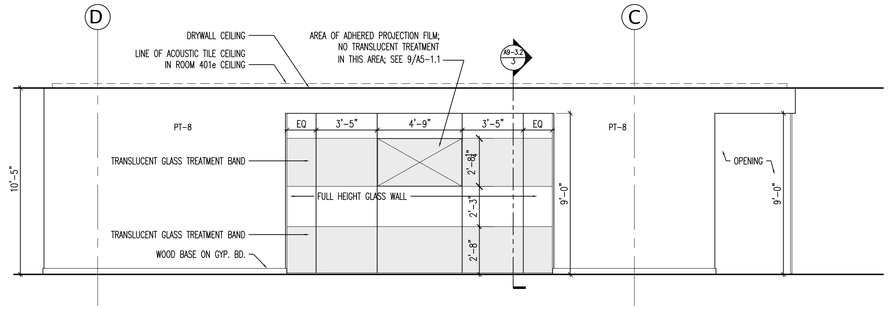

2 ELEVATION
SOUTH EXTERIOR (ROOM 401e)
SCALE: 1/4" = 1'-0"

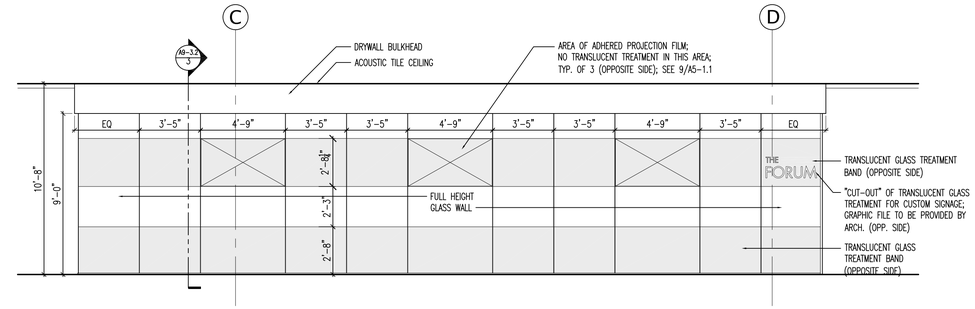

1 ELEVATION
NORTH EXTERIOR (ROOM 401e)
SCALE: 1/4" = 1'-0"

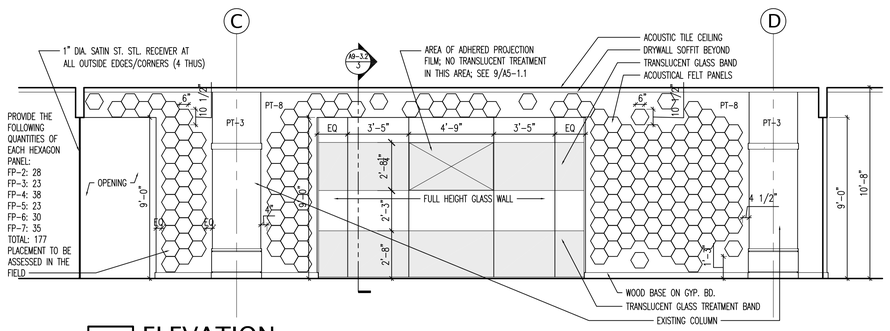

5 ELEVATION
SOUTH INTERIOR (ROOM 401e)
SCALE: 1/4" = 1'-0"

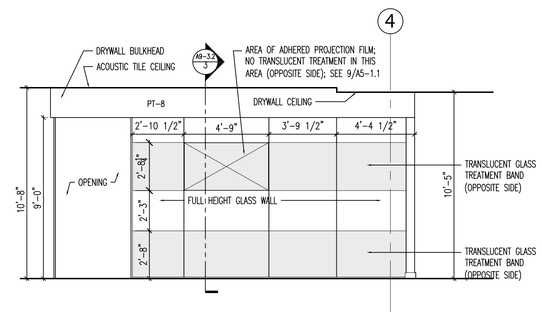

4 ELEVATION
WEST EXTERIOR (ROOM 401e)
SCALE: 1/4" = 1'-0"

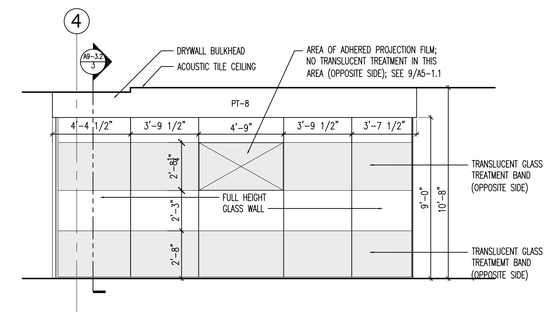

3 ELEVATION
EAST EXTERIOR (ROOM 401e)
SCALE: 1/4" = 1'-0"

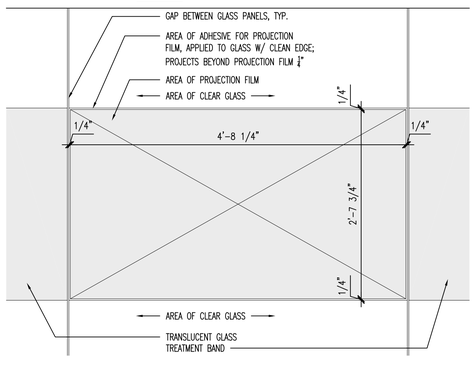

9 ELEVATION
DETAIL @ PROJECTION FILM
SCALE: 1" = 1'-0"

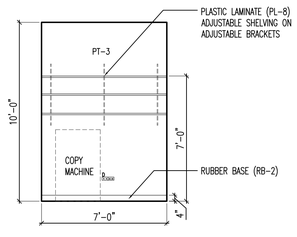

8 ELEVATION
EAST COPIER NICHE (ROOM 111)
SCALE: 1/4" = 1'-0"

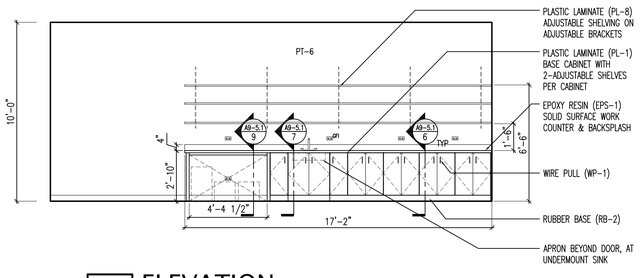

7 ELEVATION
EAST (ROOM 111)
SCALE: 1/4" = 1'-0"

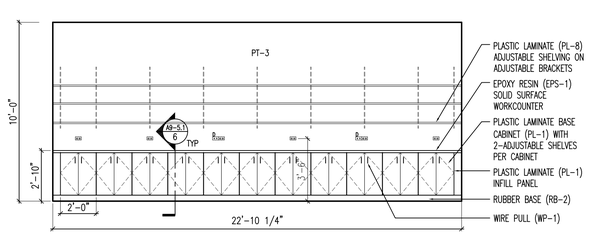

6 ELEVATION
NORTH (ROOM 111)
SCALE: 1/4" = 1'-0"

BOARD OF LIBRARY TRUSTEES OF THE CITY OF DES PLAINES, OWNER
1501 ELLINWOOD ST., DES PLAINES, IL 60016

LOHAN ANDERSON, ARCH./INT.
401 N. MICHIGAN AVE., CHICAGO, IL 60611

CALOR DESIGN GROUP, LTD., MEP/FP
2217 N. WESTERN AVE., CHICAGO, IL 60647

C. S. ASSOCIATES, INC., STRUC.
4532 W. 103RD ST., OAK LAWN, IL 60453

REV.	DATE	ISSUE
	14 AUG '15	BID AND PERMIT
	05 MAY '15	DESIGN DEVELOPMENT

DATE SIGNED:

Des Plaines Public Library Renovations

PROJECT NUMBER: 13300

ROOM 111 AND 401e ELEVATIONS

A5-1.1

ARCHITECTURE PLANNING INTERIORS
LOHAN ANDERSON

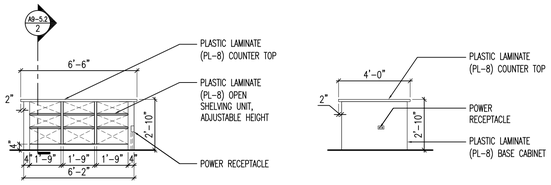

3 ELEVATION
ROOM 304 - CENTER INTERIOR
SCALE: 1/4" = 1'-0"

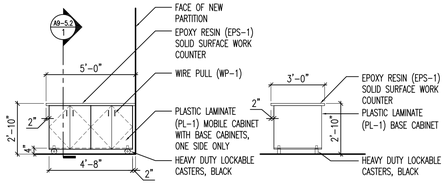

2 ELEVATION
ROOM 304 - EAST INTERIOR
SCALE: 1/4" = 1'-0"

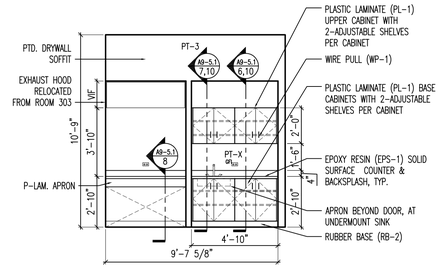

1 ELEVATION
ROOM 304 - EAST INTERIOR
SCALE: 1/4" = 1'-0"

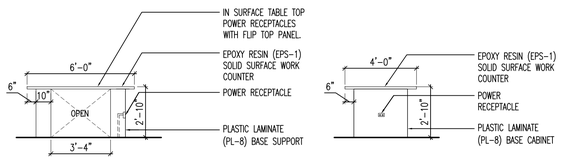

6 ELEVATION
ROOM 304 - CENTER INTERIOR
SCALE: 1/4" = 1'-0"

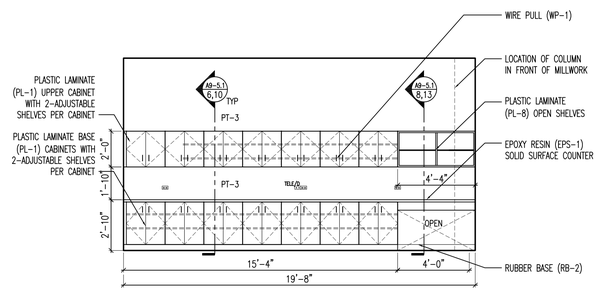

5 ELEVATION
ROOM 304 - SOUTH INTERIOR
SCALE: 1/4" = 1'-0"

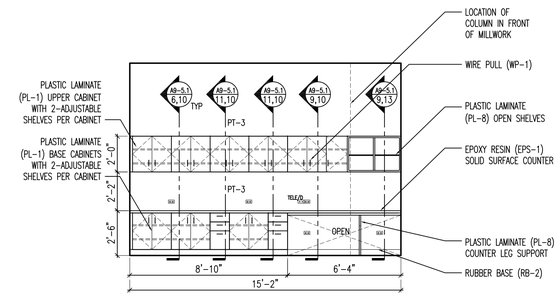

4 ELEVATION
ROOM 304 - SOUTH INTERIOR
SCALE: 1/4" = 1'-0"

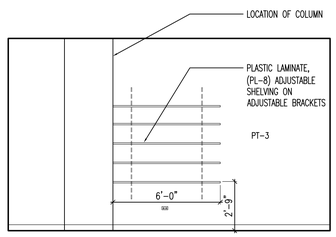

8 ELEVATION
ROOM 403 - WEST INTERIOR
SCALE: 1/4" = 1'-0"

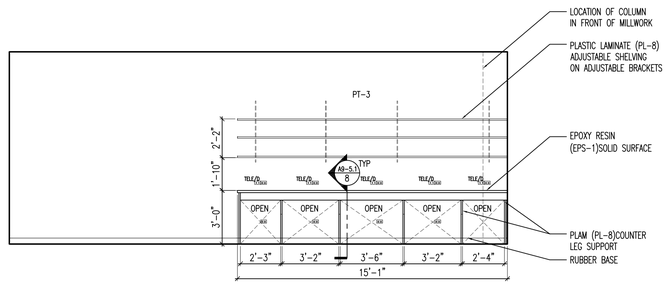

7 ELEVATION
ROOM 403 - SOUTH INTERIOR
SCALE: 1/4" = 1'-0"

BOARD OF LIBRARY TRUSTEES OF THE CITY OF DES PLAINES, OWNER
1501 ELLINWOOD ST., DES PLAINES, IL 60016

LOHAN ANDERSON, ARCH./INT.
401 N. MICHIGAN AVE., CHICAGO, IL 60611

CALOR DESIGN GROUP, LTD., MEP/FP
2217 N. WESTERN AVE., CHICAGO, IL 60647

C. S. ASSOCIATES, INC., STRUC.
4532 W. 103RD ST., OAK LAWN, IL 60453

REV.	DATE	ISSUE
	14 AUG '15	BID AND PERMIT
	05 MAY '15	DESIGN DEVELOPMENT

DATE SIGNED:

Des Plaines Public Library Renovations

PROJECT NUMBER: 13300

ROOM 304 & 403 ELEVATIONS

A5-1.2

ARCHITECTURE PLANNING INTERIORS

LOHAN ANDERSON

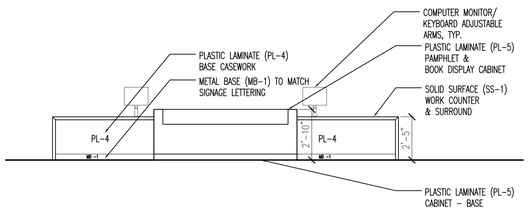

3 ELEVATION 2ND FLOOR SOUTH UNIT @ FRONT
SCALE: 1/4" = 1'-0"

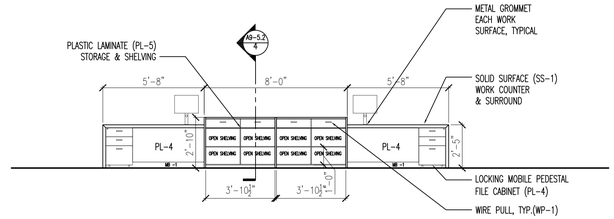

2 ELEVATION 2ND FLOOR NORTH UNIT @ BACK
SCALE: 1/4" = 1'-0"

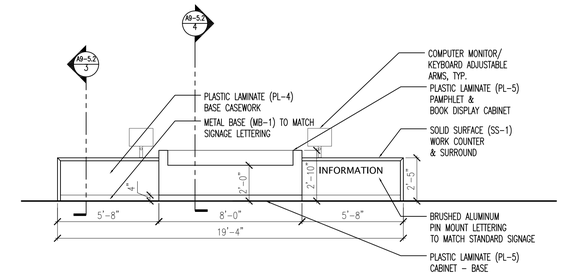

1 ELEVATION 2ND FLOOR NORTH UNIT @ FRONT
SCALE: 1/4" = 1'-0"

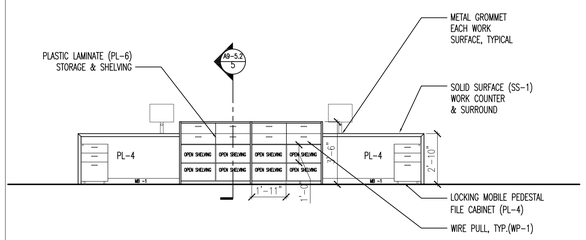

6 ELEVATION 3RD FLOOR NORTH UNIT @ BACK
SCALE: 1/4" = 1'-0"

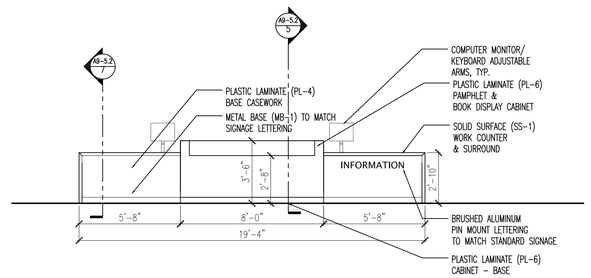

5 ELEVATION 3RD FLOOR NORTH UNIT @ FRONT
SCALE: 1/4" = 1'-0"

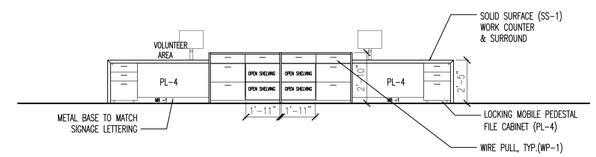

4 ELEVATION 2ND FLOOR SOUTH UNIT @ BACK
SCALE: 1/4" = 1'-0"

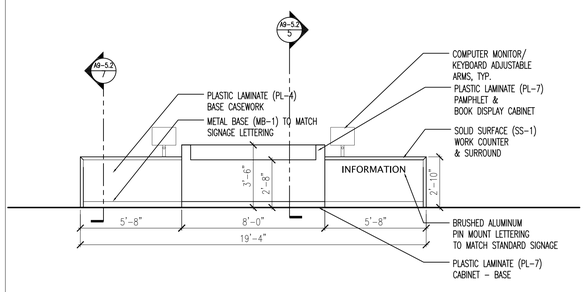

9 ELEVATION 4TH FLOOR @ FRONT
SCALE: 1/4" = 1'-0"

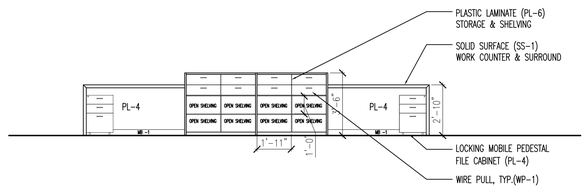

8 ELEVATION 3RD FLOOR SOUTH UNIT @ BACK
SCALE: 1/4" = 1'-0"

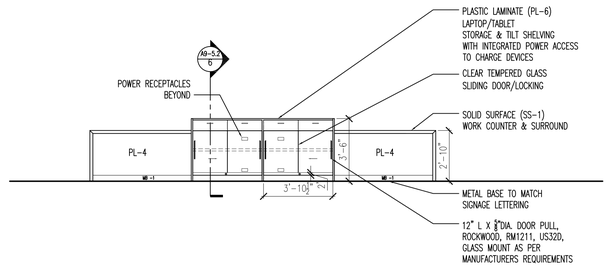

7 ELEVATION 3RD FLOOR SOUTH UNIT @ FRONT
SCALE: 1/4" = 1'-0"

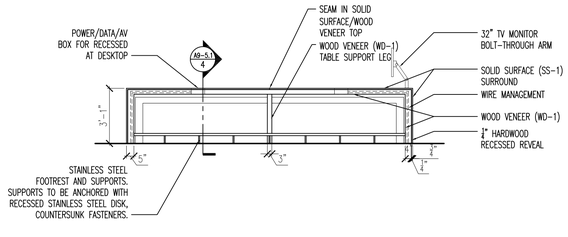

12 ELEVATION 3RD FLOOR @ E-BAR COUNTER HEIGHT
SCALE: 1/4" = 1'-0"

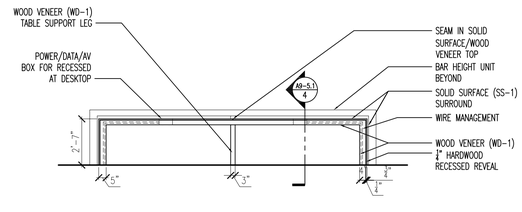

11 ELEVATION 3RD FLOOR @ E-BAR DESK HEIGHT
SCALE: 1/4" = 1'-0"

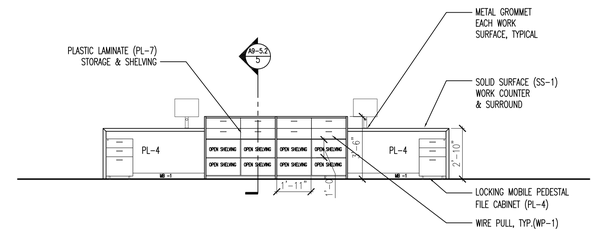

10 ELEVATION 4TH FLOOR @ BACK
SCALE: 1/4" = 1'-0"

BOARD OF LIBRARY TRUSTEES OF THE CITY OF DES PLAINES, OWNER
1501 ELLINWOOD ST., DES PLAINES, IL 60016

LOHAN ANDERSON, ARCH./INT.
401 N. MICHIGAN AVE., CHICAGO, IL 60611

CALOR DESIGN GROUP, LTD., MEP/FP
2217 N. WESTERN AVE., CHICAGO, IL 60647

C. S. ASSOCIATES, INC., STRUC.
4532 W. 103RD ST., OAK LAWN, IL 60453

GENERAL NOTES

1. PROVIDE A 3/4" GROMMET AT EACH WORK SURFACE:

2ND FLOOR - QTY:4
3RD FLOOR- QTY: 4
4TH FLOOR- QTY:2

PRODUCT: DOUG MOCKETT ABG3-94, SATIN ALUMINUM FINISH.

2. PROVIDE A MONITOR ARM AT EACH WORK SURFACE DENOTED IN PLAN:

2ND FLOOR - QTY:3
3RD FLOOR- QTY: 2
4TH FLOOR- QTY:2.

PRODUCT: HUMANSCALE. M8 FOR SINGLE MONITORS WITH A BOLT THROUGH MOUNT. FINISH - POLISHED ALUMINUM WITH WHITE TRIM.

3. PROVIDE A TV MONITOR ARM AT EACH DENOTED IN PLAN. QUANTITY:2.
PRODUCT: HUMANSCALE. M8 FOR SINGLE MONITORS WITH A BOLT THROUGH MOUNT. FINISH - POLISHED ALUMINUM WITH WHITE TRIM.

REV.	DATE	ISSUE
	14 AUG '15	BID AND PERMIT
	05 MAY '15	DESIGN DEVELOPMENT

DATE SIGNED:

Des Plaines Public Library
Renovations

PROJECT NUMBER: 13300

INFO DESK & E-BAR
ELEVATIONS
ADD ALTERNATE

A5-1.3

KEY TO CEILING SYMBOLS

- 2'X4' RECESSED PARABOLIC FLUORESCENT FIXTURE
- 2'X2' RECESSED LENSED FLUORESCENT FIXTURE
- 2'X2' RECESSED DIRECT/INDIRECT FLUORESCENT FIXTURE
- 2'X2' RECESSED PARABOLIC FLUORESCENT FIXTURE
- DECORATIVE COMPACT FLUORESCENT DOWNLIGHT
- COMPACT FLUORESCENT DOWNLIGHT
- COMPACT FLUORESCENT DOWNLIGHT WALLWASHER
- INCANDESCENT DOWNLIGHT
- INCANDESCENT DOWNLIGHT WALLWASHER
- DECORATIVE WALL-MTD. FIXTURE
- STRIP FLUORESCENT FIXTURE
- PENDANT-MTD. FLUORESCENT FIXTURE
- PENDANT-MTD. INDIRECT FIXTURE
- RECESSED LINEAR WALLWASH FIXTURE
- PENDANT-MTD. LINEAR DIRECT/INDIRECT FIXTURE
- PENDANT-MTD. DIRECT FIXTURE
- AIR DIFFUSER - SUPPLY
- AIR DIFFUSER - SUPPLY
- AIR DIFFUSER - RETURN
- RECESSED CEILING SPEAKER
- FLUSH ACCESS PANEL
- CONCEALED CEILING SPRINKLER W/ WHITE COVER PLATE
- SIDEWALL SPRINKLER
- SMOKE DETECTOR
- SECURITY CAMERA
- RELOCATED EXISTING FIXTURE OR DEVICE

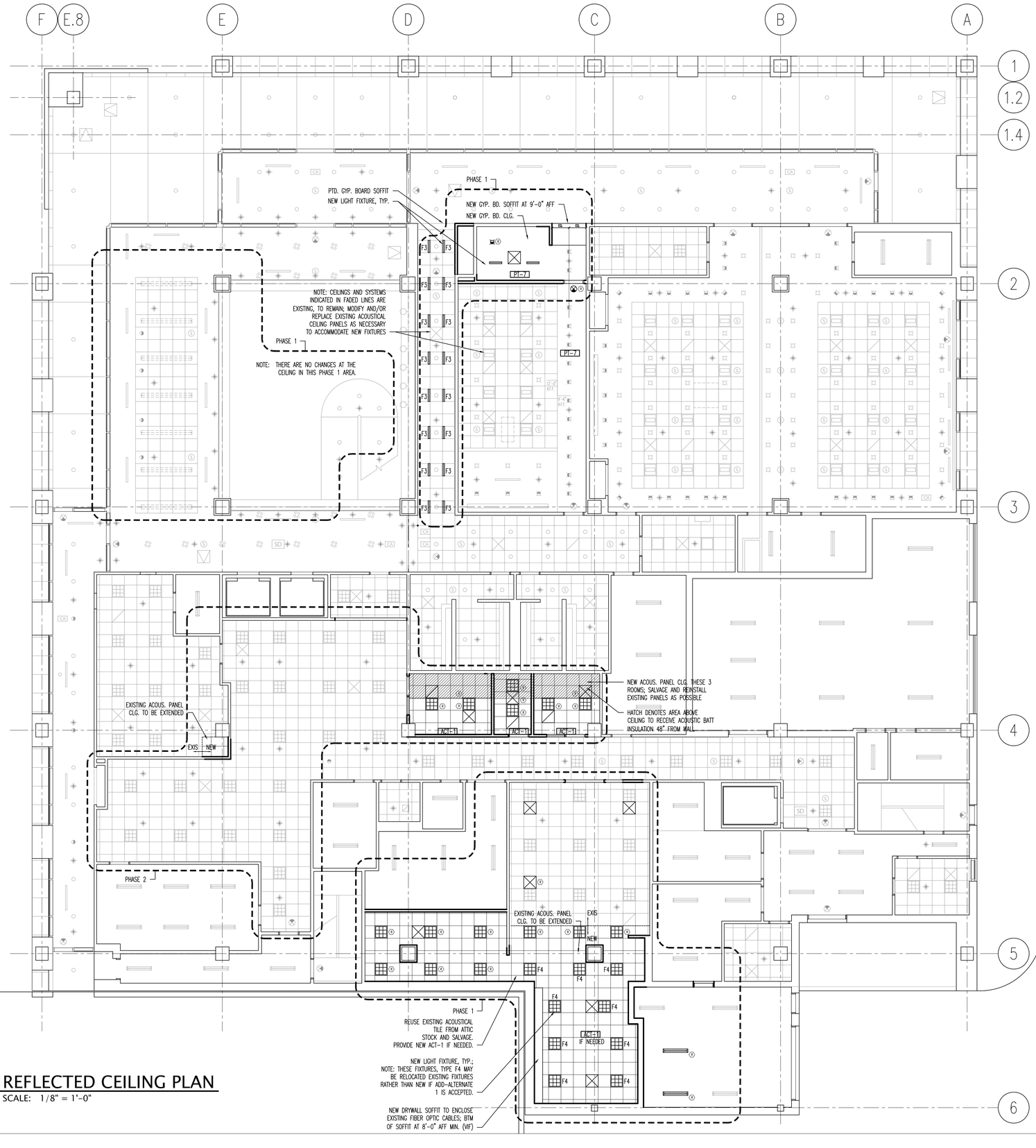

1 REFLECTED CEILING PLAN
SCALE: 1/8" = 1'-0"

ARCHITECTURE PLANNING INTERIORS
LOHAN ANDERSON

BOARD OF LIBRARY TRUSTEES OF THE CITY OF DES PLAINES, OWNER
1501 ELLINWOOD ST., DES PLAINES, IL 60016

LOHAN ANDERSON, ARCH./INT.
401 N. MICHIGAN AVE., CHICAGO, IL 60611

CALOR DESIGN GROUP, LTD., MEP/FP
2217 N. WESTERN AVE., CHICAGO, IL 60647

C. S. ASSOCIATES, INC., STRUC.
4532 W. 103RD ST., OAK LAWN, IL 60453

N

REV.	DATE	ISSUE
	14 AUG '15	BID AND PERMIT
	05 MAY '15	DESIGN DEVELOPMENT

DATE SIGNED:

Des Plaines Public Library Renovations

PROJECT NUMBER: 13300

1ST FLOOR REFLECTED CEILING PLAN

A6-1.0

ARCHITECTURE PLANNING INTERIORS

LOHAN ANDERSON

KEY TO CEILING SYMBOLS

- 2'X4' RECESSED PARABOLIC FLUORESCENT FIXTURE
- 2'X2' RECESSED LENSED FLUORESCENT FIXTURE
- 2'X2' RECESSED DIRECT/INDIRECT FLUORESCENT FIXTURE
- 2'X2' RECESSED PARABOLIC FLUORESCENT FIXTURE
- DECORATIVE COMPACT FLUORESCENT DOWNLIGHT
- COMPACT FLUORESCENT DOWNLIGHT
- COMPACT FLUORESCENT DOWNLIGHT WALLWASHER
- INCANDESCENT DOWNLIGHT
- INCANDESCENT DOWNLIGHT WALLWASHER
- DECORATIVE WALL-MTD. FIXTURE
- STRIP FLUORESCENT FIXTURE
- PENDANT-MTD. FLUORESCENT FIXTURE
- PENDANT-MTD. INDIRECT FIXTURE
- RECESSED LINEAR WALLWASH FIXTURE
- PENDANT-MTD. LINEAR DIRECT/INDIRECT FIXTURE
- PENDANT-MTD. DIRECT FIXTURE
- AIR DIFFUSER - SUPPLY
- AIR DIFFUSER - SUPPLY
- AIR DIFFUSER - RETURN
- RECESSED CEILING SPEAKER
- FLUSH ACCESS PANEL
- CONCEALED CEILING SPRINKLER W/ WHITE COVER PLATE
- SIDEWALL SPRINKLER
- SD SMOKE DETECTOR
- CA SECURITY CAMERA
- RELOCATED EXISTING FIXTURE OR DEVICE

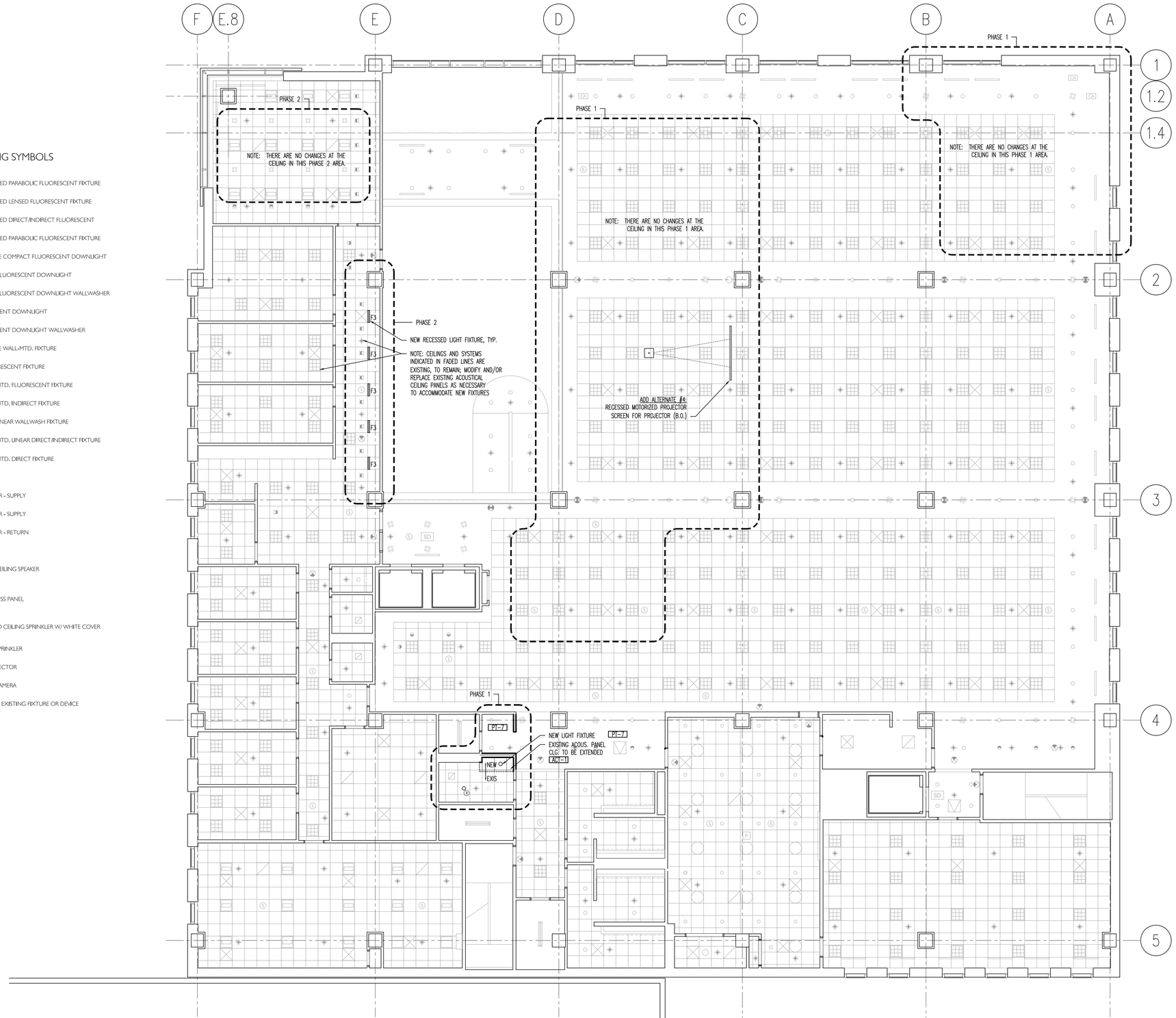

1 REFLECTED CEILING PLAN
SCALE: 1/8" = 1'-0"

BOARD OF LIBRARY TRUSTEES OF THE CITY OF DES PLAINES, OWNER
1501 ELLINWOOD ST., DES PLAINES, IL 60016

LOHAN ANDERSON, ARCH./INT.
401 N. MICHIGAN AVE., CHICAGO, IL 60611

CALOR DESIGN GROUP, LTD., MEP/FP
2217 N. WESTERN AVE., CHICAGO, IL 60647

C. S. ASSOCIATES, INC., STRUC.
4532 W. 103RD ST., OAK LAWN, IL 60453

N

REV.	DATE	ISSUE
	14 AUG '15	BID AND PERMIT
	05 MAY '15	DESIGN DEVELOPMENT

DATE SIGNED:

Des Plaines Public Library Renovations

PROJECT NUMBER: 13300

2ND FLOOR REFLECTED CEILING PLAN

A6-2.0

ARCHITECTURE PLANNING INTERIORS

LOHAN ANDERSON

BOARD OF LIBRARY TRUSTEES OF THE CITY OF DES PLAINES, OWNER
1501 ELLINWOOD ST., DES PLAINES, IL 60016

LOHAN ANDERSON, ARCH./INT.
401 N. MICHIGAN AVE., CHICAGO, IL 60611

CALOR DESIGN GROUP, LTD., MEP/FP
2217 N. WESTERN AVE., CHICAGO, IL 60647

C. S. ASSOCIATES, INC., STRUC.
4532 W. 103RD ST., OAK LAWN, IL 60453

KEY TO CEILING SYMBOLS

- 2'X4' RECESSED PARABOLIC FLUORESCENT FIXTURE
- 2'X2' RECESSED LENSED FLUORESCENT FIXTURE
- 2'X2' RECESSED DIRECT/INDIRECT FLUORESCENT FIXTURE
- 2'X2' RECESSED PARABOLIC FLUORESCENT FIXTURE
- DECORATIVE COMPACT FLUORESCENT DOWNLIGHT
- COMPACT FLUORESCENT DOWNLIGHT
- COMPACT FLUORESCENT DOWNLIGHT WALLWASHER
- INCANDESCENT DOWNLIGHT
- INCANDESCENT DOWNLIGHT WALLWASHER
- DECORATIVE WALL-MTD. FIXTURE
- STRIP FLUORESCENT FIXTURE
- PENDANT-MTD. FLUORESCENT FIXTURE
- PENDANT-MTD. INDIRECT FIXTURE
- RECESSED LINEAR WALLWASH FIXTURE
- PENDANT-MTD. LINEAR DIRECT/INDIRECT FIXTURE
- PENDANT-MTD. DIRECT FIXTURE
- AIR DIFFUSER - SUPPLY
- AIR DIFFUSER - SUPPLY
- AIR DIFFUSER - RETURN
- RECESSED CEILING SPEAKER
- FLUSH ACCESS PANEL
- CONCEALED CEILING SPRINKLER W/ WHITE COVER PLATE
- SIDEWALL SPRINKLER
- SMOKE DETECTOR
- SECURITY CAMERA
- RELOCATED EXISTING FIXTURE OR DEVICE

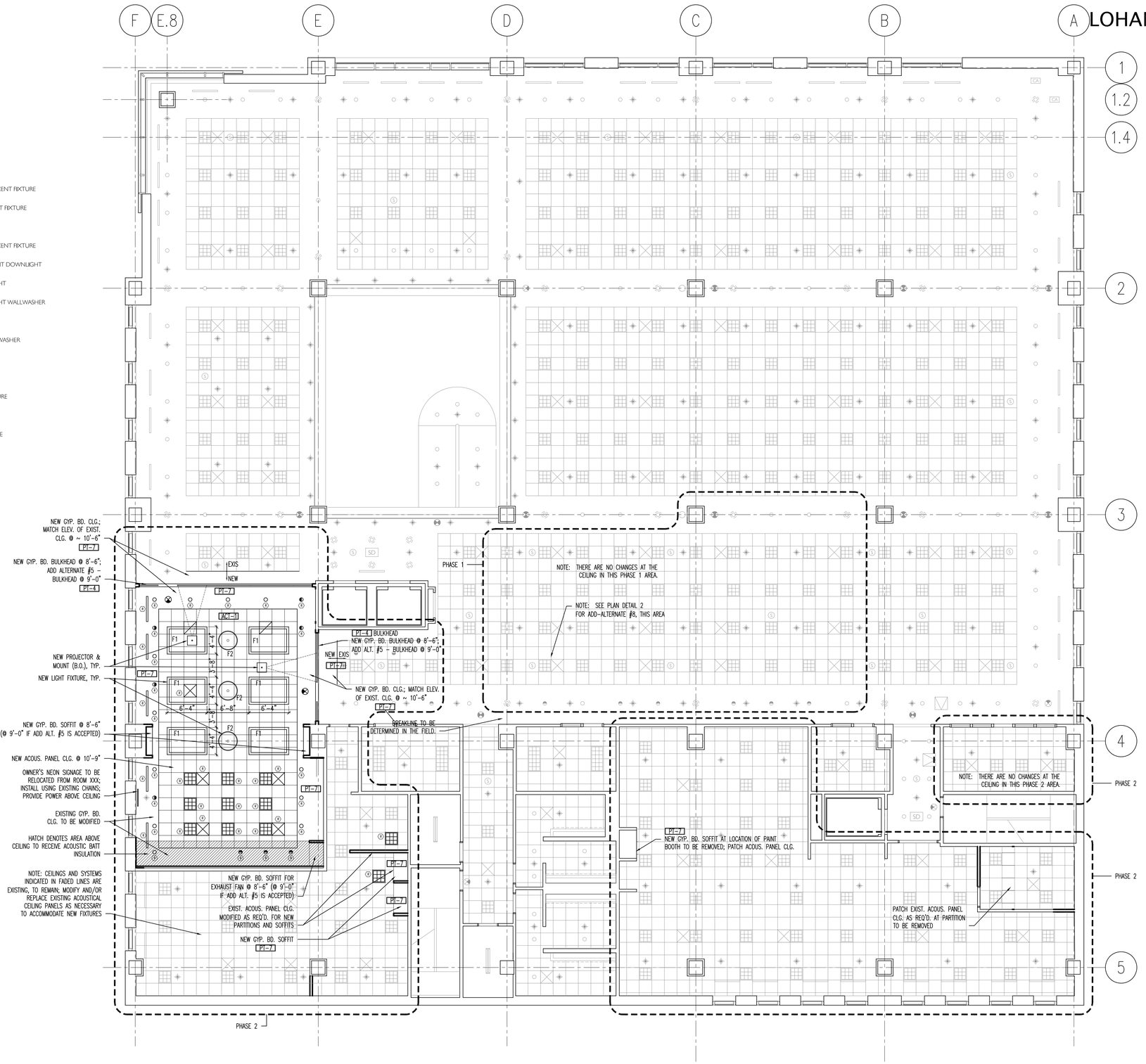

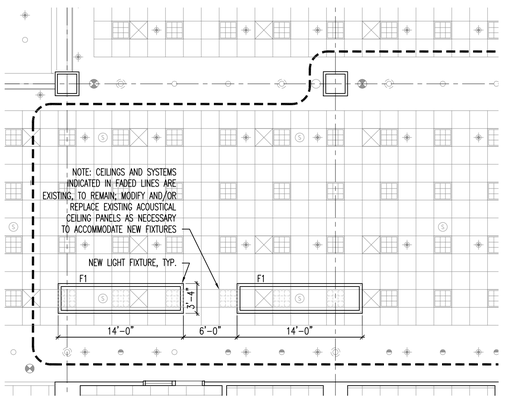

2 PLAN DETAIL ADD-ALT. #8
SCALE: 1/8" = 1'-0"

1 REFLECTED CEILING PLAN
SCALE: 1/8" = 1'-0"

REV.	DATE	ISSUE
	14 AUG '15	BID AND PERMIT
	05 MAY '15	DESIGN DEVELOPMENT

DATE SIGNED:

Des Plaines Public Library Renovations

PROJECT NUMBER: 13300

3RD FLOOR REFLECTED CEILING PLAN

A6-3.0

ARCHITECTURE PLANNING INTERIORS

LOHAN ANDERSON

BOARD OF LIBRARY TRUSTEES OF THE CITY OF DES PLAINES, OWNER
1501 ELLINWOOD ST., DES PLAINES, IL 60016

LOHAN ANDERSON, ARCH./INT.
401 N. MICHIGAN AVE., CHICAGO, IL 60611

CALOR DESIGN GROUP, LTD., MEP/FP
2217 N. WESTERN AVE., CHICAGO, IL 60647

C. S. ASSOCIATES, INC., STRUC.
4532 W. 103RD ST., OAK LAWN, IL 60453

KEY TO CEILING SYMBOLS

- 2'X4' RECESSED PARABOLIC FLUORESCENT FIXTURE
- 2'X2' RECESSED LENSED FLUORESCENT FIXTURE
- 2'X2' RECESSED DIRECT/INDIRECT FLUORESCENT FIXTURE
- 2'X2' RECESSED PARABOLIC FLUORESCENT FIXTURE
- DECORATIVE COMPACT FLUORESCENT DOWNLIGHT
- COMPACT FLUORESCENT DOWNLIGHT
- COMPACT FLUORESCENT DOWNLIGHT WALLWASHER
- INCANDESCENT DOWNLIGHT
- INCANDESCENT DOWNLIGHT WALLWASHER
- DECORATIVE WALL-MTD. FIXTURE
- STRIP FLUORESCENT FIXTURE
- PENDANT-MTD. FLUORESCENT FIXTURE
- PENDANT-MTD. INDIRECT FIXTURE
- RECESSED LINEAR WALLWASH FIXTURE
- PENDANT-MTD. LINEAR DIRECT/INDIRECT FIXTURE
- PENDANT-MTD. DIRECT FIXTURE
- AIR DIFFUSER - SUPPLY
- AIR DIFFUSER - SUPPLY
- AIR DIFFUSER - RETURN
- RECESSED CEILING SPEAKER
- FLUSH ACCESS PANEL
- CONCEALED CEILING SPRINKLER W/ WHITE COVER PLATE
- SIDEWALL SPRINKLER
- SMOKE DETECTOR
- SECURITY CAMERA
- RELOCATED EXISTING FIXTURE OR DEVICE

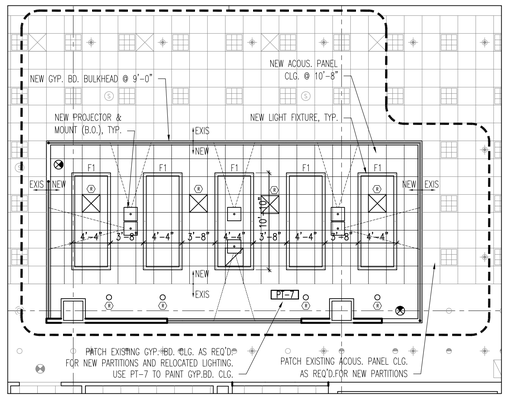

2 PLAN DETAIL ADD-ALT. #6

SCALE: 1/8" = 1'-0"

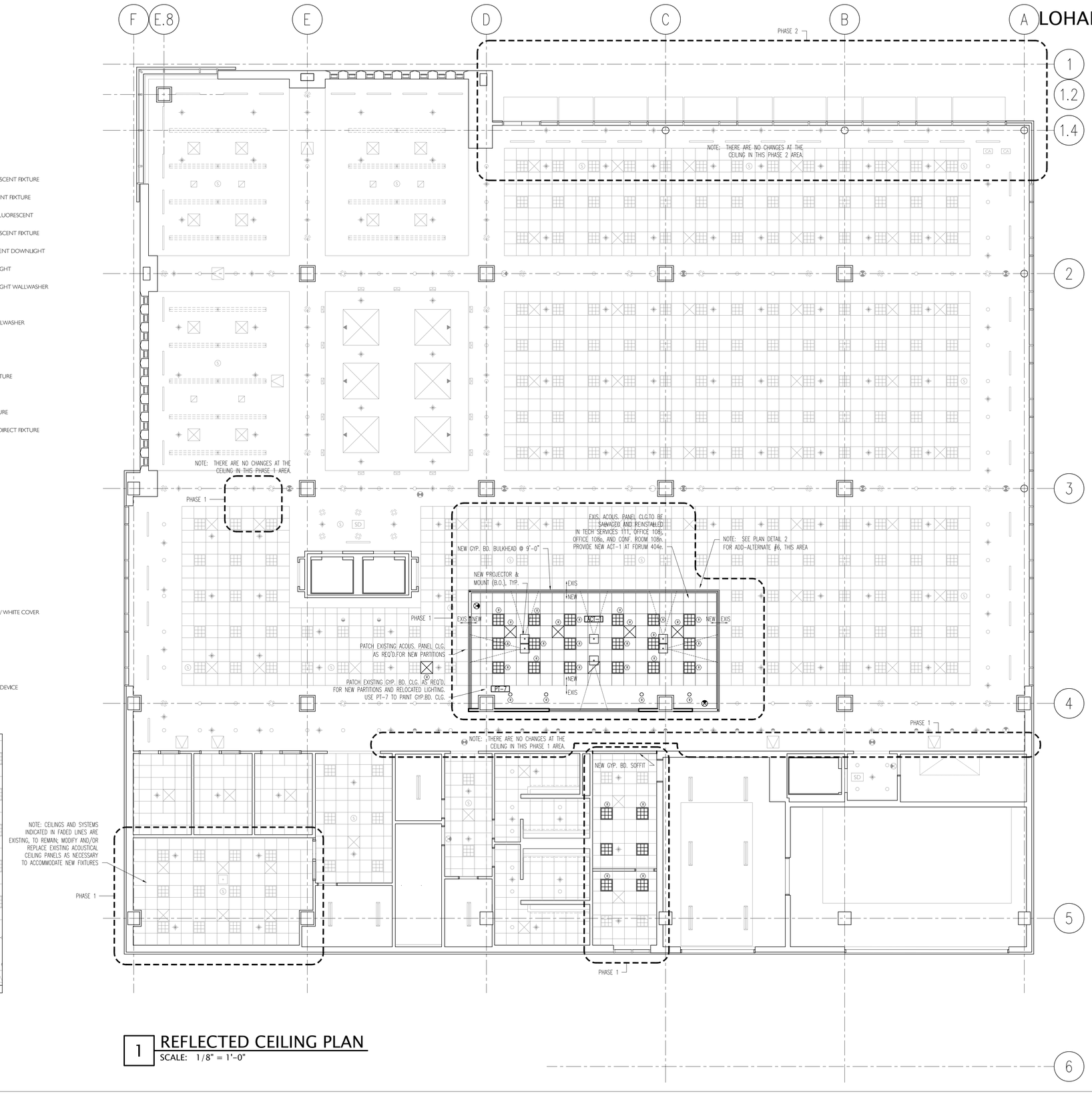

1 REFLECTED CEILING PLAN

SCALE: 1/8" = 1'-0"

N

REV.	DATE	ISSUE
	14 AUG '15	BID AND PERMIT
	05 MAY '15	DESIGN DEVELOPMENT

DATE SIGNED:

Des Plaines Public Library Renovations

PROJECT NUMBER: 13300

4TH FLOOR REFLECTED CEILING PLAN

A6-4.0

ARCHITECTURE PLANNING INTERIORS
LOHAN ANDERSON

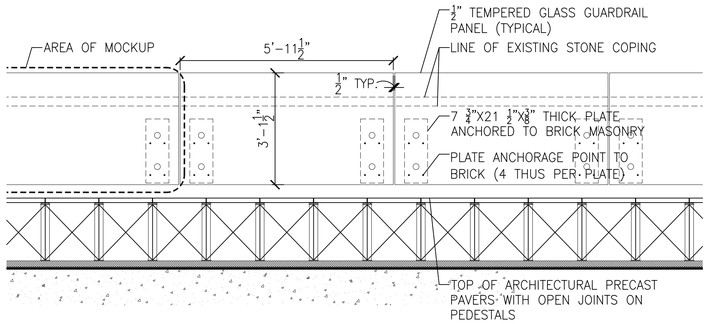

2 SECTION @ 4TH FLOOR BALCONY GUARDRAIL
SCALE: 1/2" = 1'-0"

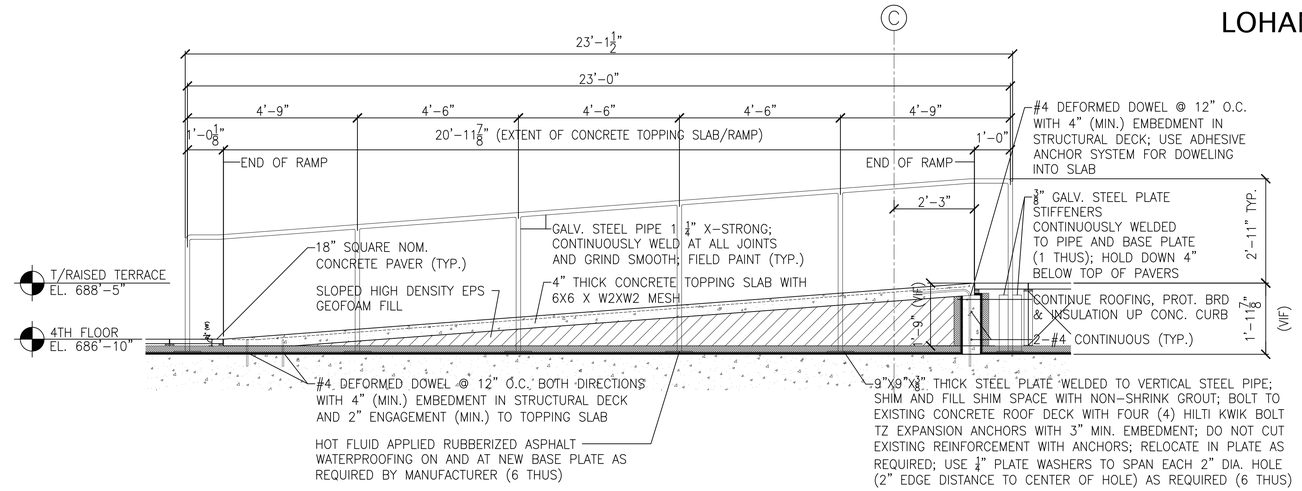

1 SECTION @ 4TH FLOOR BALCONY RAMP RAILING
SCALE: 1/2" = 1'-0"

BOARD OF LIBRARY TRUSTEES OF THE CITY OF DES PLAINES, OWNER
1501 ELLINWOOD ST., DES PLAINES, IL 60016

LOHAN ANDERSON, ARCH./INT.
401 N. MICHIGAN AVE., CHICAGO, IL 60611

CALOR DESIGN GROUP, LTD., MEP/FP
2217 N. WESTERN AVE., CHICAGO, IL 60647

C. S. ASSOCIATES, INC., STRUC.
4532 W. 103RD ST., OAK LAWN, IL 60453

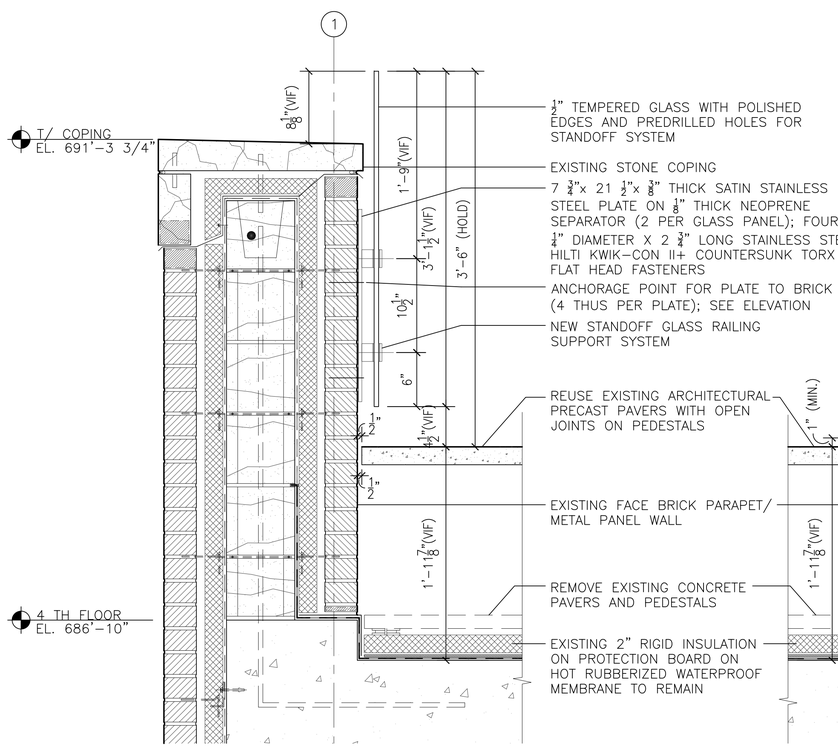

6 DETAIL @ 4TH FLOOR BALCONY GUARDRAIL
SCALE: 1-1/2" = 1'-0"

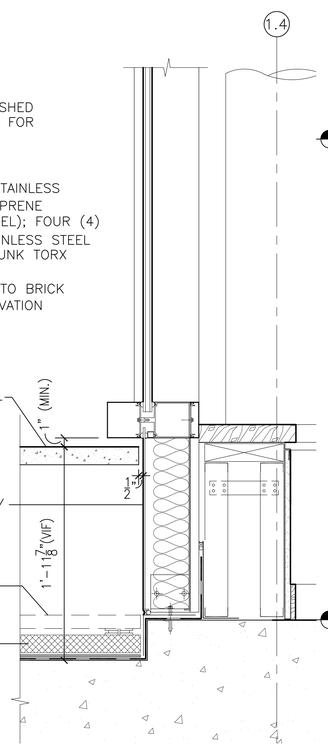

5 DETAIL @ 4TH FLOOR BALCONY UPPER LEVEL
SCALE: 1-1/2" = 1'-0"

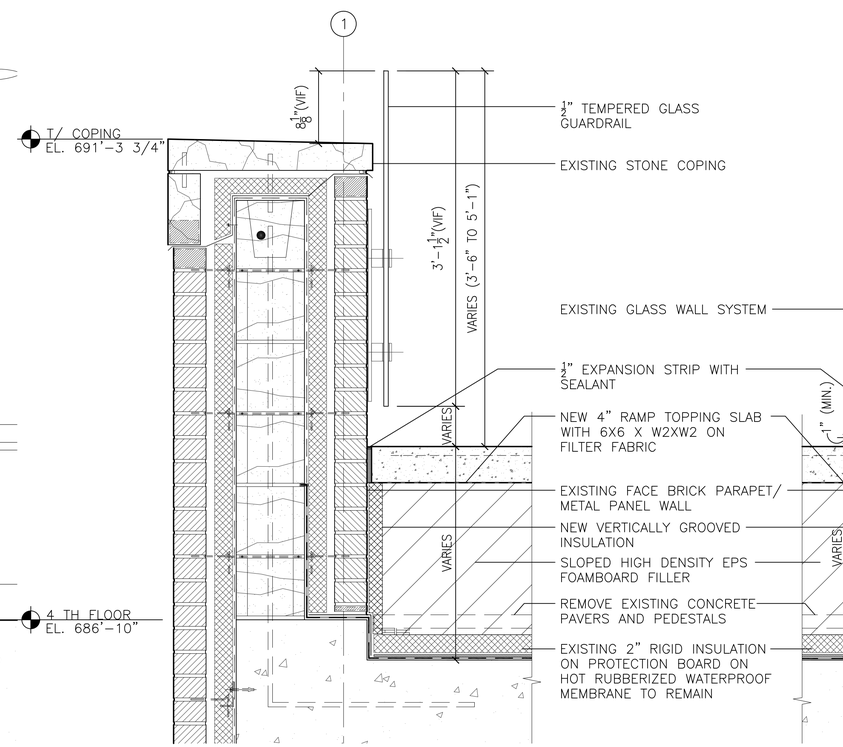

4 DETAIL @ 4TH FLOOR BALCONY RAMP
SCALE: 1-1/2" = 1'-0"

3 DETAIL @ 4TH FLOOR BALCONY RAMP
SCALE: 1-1/2" = 1'-0"

REV.	DATE	ISSUE
	14 AUG '15	BID AND PERMIT
	05 MAY '15	DESIGN DEVELOPMENT

DATE SIGNED:

Des Plaines Public Library Renovations

PROJECT NUMBER: 13300

FOURTH FLOOR BALCONY DETAILS

A8-1.0

ARCHITECTURE PLANNING INTERIORS
LOHAN ANDERSON

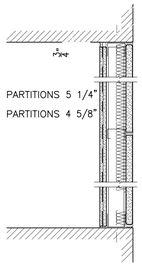

STRUC. CONCRETE SLAB
CONTINUOUS FIRE-RATED SEALANT SYSTEM.

EDGE OF SLAB WHERE APPLICABLE
TOP RUNNER

3 1/2" SOUND-ATTENUATION INSULATION
('S1S' & 'S2S' PARTITIONS ONLY)

1" FIRE RATED GYPSUM BOARD LINER PANEL

4" 20 GA. MTL. C-H STUDS @ 24" O.C.

2 LAYERS 5/8" FIRE RATED GYPSUM BD. AT 'S2' AND 'S2S' PARTITIONS
(ONE LAYER 5/8" FIRE RATED GYPSUM BOARD AT 'S1' 'S1S' PARTITIONS)

BOTTOM RUNNER TRACK
EDGE OF SLAB WHERE APPLICABLE
CONTINUOUS FIRE RATED SEALANT

SEE NOTE 3 CONCERNING THRU-WALL PENETRATIONS.

'S1' AS NOTED ABOVE, 1 HOUR RATED (UL U469) – STC RATING = 37 (EST.)
'S1S' 1 HOUR RATED (UL U469) – W/ SOUND ATTENUATION, STC RATING = 45 (EST.)
'S2' AS NOTED ABOVE, 2 HOUR RATED (UL U438) – STC RATING = 39
'S2S' 2 HOUR RATED (UL U438) – W/ SOUND ATTENUATION, STC RATING = 47

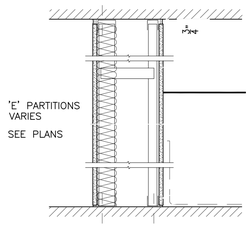

FIRESTOP SYSTEM AT TOP OF WALL – SEE NOTE 4.
("E1" & "E1S" PARTITIONS.)
STRUC. CONCRETE SLAB
CONTINUOUS FIRE SEALANT SYSTEM BOTH SIDES.
("E1" AND "E1S" PARTITIONS ONLY)
CONTINUOUS ACOUSTICAL SEALANT BOTH SIDES.
("ES" PARTITION ONLY)
TOP RUNNER DEFLECTION TRACK – SEE NOTE 2
STEEL RUN BRACES SPANNING CHASE SCREW ATTACHED TO STUDS
2 1/2" 25 GA. METAL STUDS @ 16" O.C.
(3 5/8" STUDS ON INSULATION SIDE)
CEILING LINE (REF. REFLECTED CLG. PLANS)
3" SOUND-ATTENUATION INSULATION
('ES' & 'E1S' PARTITIONS ONLY)
ONE LAYER OF 5/8" GYPSUM BOARD EACH SIDE
(FIRE RATED GYPSUM BD. FOR 'E1' & 'E1S' PARTITIONS)
BOTTOM RUNNER TRACK
CONTINUOUS FIRE-RATED SEALANT SYSTEM BOTH SIDES.
("E1" AND "E1S" PARTITIONS ONLY)
CONTINUOUS ACOUSTICAL SEALANT BOTH SIDES
("ES" PARTITION ONLY)

'E' AS NOTED ABOVE
'E1' 1 HOUR RATED (UL U420) – STC RATING 52
'E1S' 1 HOUR RATED (UL U420) – W/ SOUND ATTENUATION, STC RATING = 52
'ES' W/ SOUND ATTENUATION, STC RATING = 52

SEE NOTE 3 CONCERNING THRU-WALL PENETRATIONS.

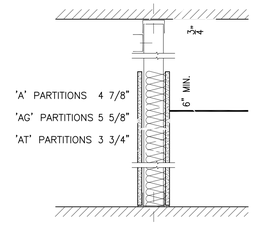

CONT. METAL FRAMING WHEN REQUIRED
FOR TOP OF STUD BRACING.
CONCRETE SLAB/ROOF DECK

TOP RUNNER DEFLECTION TRACK – SEE NOTE 2.

3 5/8" 25 GA. METAL STUDS @ 16" O.C.
(20 GA. @ 1ST FLOOR AND TYPE AG)
2 1/2" 25 GA. METAL STUDS @ 16" O.C.
(TYPE "AT" ONLY)

CEILING LINE (REF. REFLECTED CLG. PLANS)
3" SOUND-ATTENUATION INSULATION

ONE LAYER 5/8" GYPSUM BOARD EACH SIDE (ADD $\frac{3}{8}$" LAYER OF GYP. BRD. TO EACH SIDE TYPE AG ONLY); EXTEND GYPSUM BOARD FROM FLOOR TO 6" ABOVE CEILING
BOTTOM RUNNER TRACK

'A' AS NOTED ABOVE
'AT' AS NOTED ABOVE

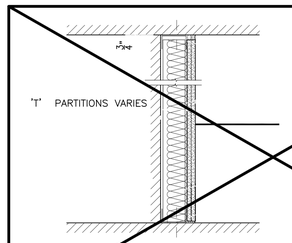

STRUC. CONCRETE SLAB

CONTINOUS ACOUSTICAL SEALANT
TOP RUNNER DEFLECTION TRACK – SEE NOTE 2
BACK-UP AS OCCURS
3 5/8" 25 GA. METAL STUDS @ 16" O.C.
(20 GA. @ 1ST FLOOR)

CEILING LINE (SEE REFLECTED CLG. PLANS)
TWO LAYERS 5/8" GYPSUM BOARD
3" SOUND- ATTENUATION INSULATION
BOTTOM RUNNER TRACK
CONTINOUS ACOUSTICAL SEALANT

'T' AS NOTED ABOVE

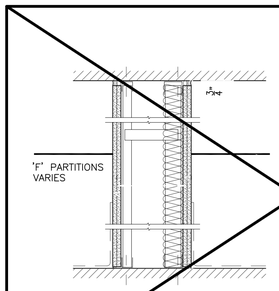

FIRESTOP SYSTEM AT TOP OF WALL – SEE NOTE 4.
("E1" & "E1S" PARTITIONS.)
STRUC. CONCRETE SLAB
CONTINUOUS ACOUSTICAL SEALANT BOTH SIDES
("FS"PARTITIONS ONLY)

TOP RUNNER DEFLECTION TRACK – SEE NOTE 2
STEEL RUN BRACES SPANNING CHASE
SCREW ATTACHED TO STUDS
2 1/2" 25 GA. METAL STUDS @ 16" O.C.
(3 5/8" STUDS AT INSULATION SIDE.)
CEILING LINE (REF. ARCH. REFLECTED CLG. PLANS)
3" SOUND-ATTENUATION INSULATION
("FS" PARTITIONS ONLY)
2 LAYERS OF 5/8" FIRE RATED GYPSUM BD. BOTH SIDES

BOTTOM RUNNER TRACK

CONTINUOUS ACOUSTICAL SEALANT BOTH SIDES
("FS" PARTITION ONLY)

'F' AS NOTED ABOVE
'FS' W/ SOUND ATTENUATION, STC RATING = 52

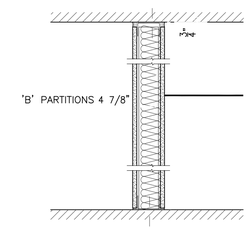

STRUCTURAL CONCRETE SLAB
FIRESTOP SYSTEM AT TOP OF WALL – SEE NOTE 4.
("B1" & "B1S" PARTITIONS.)
CONTINUOUS FIRE RATED SEALANT SYSTEM BOTH SIDES
('B1' & 'B1S' PARTITIONS ONLY)
CONTINUOUS ACOUSTICAL SEALANT BOTH SIDES
('BS' PARTITION ONLY)
TOP RUNNER DEFLECTION TRACK – SEE NOTE 2
3 5/8" 25 GA. METAL STUDS @ 16" O.C.
(20 GA. @ 1ST FLOOR)
CEILING LINE (SEE ARCH. REFLECTED CLG. PLANS)
3" SOUND-ATTENUATION INSULATION
('B1S' AND 'BS' PARTITIONS ONLY)
ONE LAYER 5/8" GYPSUM BOARD EACH SIDE
(FIRE RATED GYPSUM BOARD 'B1' & 'B1S' PARTITIONS ONLY)
BOTTOM RUNNER TRACK
CONT. FIRE RATED SEALANT SYSTEM BOTH SIDES
('B1' & 'B1S' PARTITIONS ONLY)
CONTINUOUS ACOUSTICAL SEALANT BOTH SIDES
('BS' PARTITIONS ONLY)
SEE NOTE 3 CONCERNING THRU-WALL PENETRATIONS.

'B' AS NOTED ABOVE, STC RATING = 40
'B1' 1 HOUR RATED (UL U465) – STC RATING = 40
'B1S' 1 HOUR RATED (UL U465) – W/ SOUND ATTENUATION, STC RATING = 49
'BS' W/ SOUND ATTENUATION, STC RATING = 49

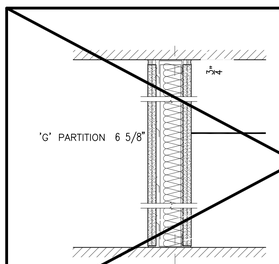

STRUC. CONCRETE SLAB
CONTINUOUS ACOUSTICAL SEALANT BOTH SIDES

TOP RUNNER DEFLECTION TRACK – NOTE 2
3 5/8" 25 GA. METAL STUDS @ 16" O.C.
(20 GA. @ 1ST FLOOR)
CEILING LINE (SEE ARCH. REFLECTED CLG. PLANS)
3" SOUND-ATTENUATION INSULATION

TWO LAYERS 5/8" GYPSUM BOARD EACH SIDE
RESILIENT CHANNELS AT 24" O.C.
BOTTOM RUNNER TRACK
CONT. ACOUSTICAL SEALANT BOTH SIDES

'GS' W/ SOUND ATTENUATION, STC RATING = 61

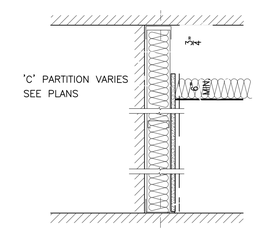

STRUC. CONCRETE SLAB

TOP RUNNER DEFLECTION TRACK – SEE NOTE 2

BACK-UP SURFACE WHERE APPLICABLE

BATT INSULATION AT "CSA" WALL TYPE

CEILING LINE WHERE APPLICABLE

2 1/2" 25 GA. METAL STUDS @ 16" O.C. WITH ANCHORING AT 1/3 POINTS (20 GA. 3 $\frac{5}{8}$" STUDS WHERE BACKUP IS NOT AVAILABLE FOR ANCHORAGE)

ONE LAYER 5/8" GYPSUM BOARD (2 LAYERS WHERE BACK-UP IS NOT AVAILABLE FOR ANCHORAGE); EXTEND GYPSUM BOARD FROM FLOOR TO 6" ABOVE CEILING

BOTTOM RUNNER TRACK

AT "CS" DESIGNATION PROVIDE 2" FOIL-FACED SEMI-RIGID INSULATION. VAPOR TAPE ALL SEAMS & TOP & BOTTOM EDGES. EXTEND GYP. BD FACING TO WALL WHEN NO CEILING.

AT "CSA" DESIGNATION PROVIDE 2" BATT INSULATION IN WALL AND ABOVE CEILING EXTENDING 48" FROM WALL. CONTINUOUS ACOUSTIC SEALANT AT BOTTOM TRACK.

'C' AS NOTED ABOVE
'CS' W/ THERMAL INSULATION
'CSA' W/ ACOUSTIC INSULATION

GENERAL NOTES:

1. RATED ASSEMBLIES BASED ON USE OF USG PRODUCTS
2. TOP RUNNER DEFLECTION TRACK TO BE 2" DEEP. STEEL VERTICAL STUDS SHALL BE CUT 3/4" LESS IN LENGTH THAN WALL HT. WITH STUDS NESTED IN RUNNER WITHOUT ATTACHMENT TO ALLOW FOR STRUCTURAL DEFLECTION.
3. AT ALL THROUGH-WALL PENETRATIONS OF FIRE-RATED PARTITIONS, PROVIDE COMPLETE U.L. LISTED FIRESTOPPING SYSTEM AS REQUIRED & DESCRIBED IN SPECIFICATION SECTION 07840 BASED ON TYPE OF PENETRATING ITEM & CONSTRUCTION CONDITION. PER SPECIFICATION, SUBMIT U.L. FIRESTOP DESIGNATION FOR PROPOSED SYSTEM FOR EACH TYPE OF PENETRATION & CONSTRUCTION CONDITION. PROVIDE ALL COMPONENTS & DETAILING COMPLYING WITH SPECIFIC U.L. REQUIREMENTS WHICH CAN VARY BETWEEN DIFFERENT MANUFACTURERS OF THE VARIOUS SYSTEMS SPECIFIED.
4. TOP OF WALL FIRESTOPPING SYSTEM BASED ON "HILTI-CONSTRUCTION CHEMICALS" U.L. DESIGNATION HW-D-0010. MODIFY DETAIL AS REQUIRED PROVIDING ALL NECESSARY COMPONENTS & DETAILING TO ACCOMMODATE SYSTEM BY OTHER SPECIFIED MANUFACTURERS AS TESTED BY U.L. & PER APPROPRIATE TEST DESIGNATION.

THE FOLLOWING INFORMATION APPLIES TO ALL CONCRETE MASONRY CONSTRUCTION ON THE PROJECT.

1. MASONRY SHALL BE CONSTRUCTED WITH A MINIMUM COMPRESSIVE STRENGTH (f'm) OF 1,500 PSI.
2. JOINT REINFORCEMENT TYPES: ALLWALLS

   EXTERIOR LOCATIONS OR CAVITY WALLS: 0.1875" TRUSS OR LADDER TYPE: GALVANIZED PER ASTM A-153 (1.5 OZ./SQ.FT.)

   INTERIOR WALLS: 0.1875" TRUSS OR LADDER TYPE: GALVANIZED PER ASTM A-641 (0.1 OZ./SQ.FT.)

   ALL JOINT REINFORCEMENT SHALL BE SPACED 16" CENTER TO CENTER VERTICALLY.
3. VERTICAL REINFORCEMENT: ALL VERTICAL REINFORCEMENT SHALL INCLUDE DOWELS EMBEDDED INTO THE SLAB: EXTENDING 24"INTO THE MASONRY UNITS.
   PROVIDE AN ADDITIONAL REINFORCED MASONRY CELL WITH 1-#6, EACH SIDE OF ANY ARCHITECTURAL OPENING.
4. MASONRY ANCHORS AND TIES: ALL MASONRY ANCHORS SHALL BE PROTECTED FROM CORROSION BY BEING FABRICATED FROM GALVANIZED STEEL PER ASTM A-153. ALL MASONRY ANCHORS EXPOSED DIRECTLY TO THE WEATHER SHALL BE AISI SERIES 300 STAINLESS STEEL.

   CORROGATED STRAPS ANCHORS WILL NOT BE ALLOWED.
5. MASONRY JOINTS ALL JOINTS WITHIN EXTERIOR WALLS WHICH RECEIVE BITUMINUNOUS DAMPPROOFING OR CEMENTITIOUS WATERPROOFING SHALL BE TOOLED CONCAVE. ALL INTERIOR WALLS WITH JOINTS EXPOSED TO VIEW SHALL HAVE JOINTS TOOLED CONCAVE. ALL OTHER JOINTERY SHALL BE STRUCK FLUSH.
6. GROUT USED IN REINFORCED CELLS OF CONCRETE MASONRY CONSTRUCTION SHALL BE FINE AGGREGATE TYPE; MINIMUM COMPRESSIVE STRENGTH OF OF 2,300 PSI.
7. LINTELS: PROVIDE THE FOLLOWING LINTELS FOR THE SPANS INDICATED:
8. 5/8" DIA. HILTI HIT-HY 300 ADHESIVE ANCHOR SYSTEM WITH 3" MIN. EMBEDMENT. DO NOT CUT REINFORCEMENT IN EXISTING CONCRETE SLAB.

SPAN	LINTEL SIZE & TYPE
4'-0" OR LESS	8" HIGH CMU W/ 1- #4
4'-1" TO 6'-0"	8" HIGH CMU W/ 1- #7
6'-1" TO 8'-0"	16" HIGH CMU W/ 1-#5
8'-1" TO 12'-0"	W8 X 18 STL. BM. W/ 3/8" PL.
12-1" TO 16'-0"	WT 10.5 X 66
PROVIDE 8" MINIMUM BEARING FOR ALL UNITS	

SEE SPECIFICATION SECTION 04200 FOR ADDITIONAL REQUIREMENTS.

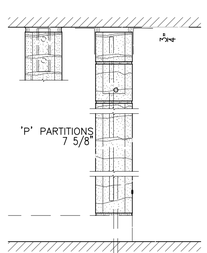

PROVIDE SLIP-TYPE JOINT STABLIZING ANCHOR WHERE CONDITIONS DO NOT PERMIT ANGLE BRACING.
FILL JOINT W/ FIRE STOPPING AS REQ'D. BY FIRESTOPPING SYSTEM.
('P1', 'P2', 'P3' & 'P3R' PARTITIONS ONLY)
CONCRETE SLAB/ROOF DECK

CONT. FIRE-RATED SEALANT SYSTEM BOTH SIDES.
3" X 4" X 3/8" X 0'-4" LLV PTD. STEEL ANGLE HEAD ANCHORS AT 48" O.C. & NOT LESS THAT 24" FROM ENDS (SEE NOTE 8 FOR WALL TYPE P3R ANGLE ANCHORS TO CONCRETE)
REINFORCED BOND BEAM WITH 1-#5 CONTINUOUS (P3R WALLS ONLY)
8" NOMINAL CMU WITH HORIZ. JOINT REINFORCING AT 16" O.C. (#5 REBAR @ 32" O.C. AT P3R WALLS ONLY)
ANCHORAGE: #5 DOWELS @ 32" O.C. & 3" MIN. EMBEDMENT (24" OVERLAP WITH VERT. REBAR AT P3R WALLS ONLY)

TOPPING SLAB (AT FIRST FLOOR GARAGE)

STRUCTURAL SLAB-ON-GRADE (NOT TOPPING SLAB)

SEE NOTE 3 CONCERNING THRU-WALL PENETRATIONS.

'P' AS NOTED ABOVE
'P1' 1 HOUR RATED
'P2' 2 HOUR RATED
'P3' 3 HOUR RATED
'P3R' 3 HOUR RATED; REINFORCED CMU

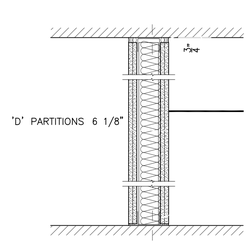

STRUC. CONCRETE SLAB
FIRESTOP SYSTEM AT TOP OF WALL – SEE NOTE 4.
("D2" & "D2S" PARTITIONS.)
CONTINUOUS FIRE RATED SEALANT SYSTEM BOTH SIDES
('D2' & 'D2S' PARTITIONS ONLY)
CONTINUOUS ACOUSTICAL SEALANT BOTH SIDES
('DS' PARTITION ONLY)
TOP RUNNER DEFLECTION TRACK – SEE NOTE 2
3 5/8" 25 GA. METAL STUDS @ 16" O.C.
(20 GA. @ 1ST FLOOR)
CEILING LINE (SEE REFLECTED CLG. PLANS)
3" SOUND-ATTENUATION INSULATION
('D2S' & 'DS' PARTITIONS ONLY)
TWO LAYERS 5/8" GYPSUM BOARD EACH SIDE
(FIRE RATED GYPSUM BD. AT 'D2' AND 'D2S' PARTITIONS ONLY)
BOTTOM RUNNER TRACK
CONTINUOUS FIRE RATED SEALANT BOTH SIDES
('D2' & 'D2S' PARTITIONS ONLY)
CONTINUOUS ACOUSTICAL SEALANT BOTH SIDES
('DS' PARTITION ONLY)
SEE NOTE 3 CONCERNING THRU-WALL PENETRATIONS.

'D' AS NOTED ABOVE
'D2' 2 HOUR RATED (UL U411) – STC RATING 48
'D2S' 2 HOUR RATED (UL U411) – W/ SOUND ATTENUATION, STC RATING = 56
'DS' W/ SOUND ATTENUATION, STC RATING = 56

BOARD OF LIBRARY TRUSTEES OF THE CITY OF DES PLAINES, OWNER
1501 ELLINWOOD ST., DES PLAINES, IL 60016

LOHAN ANDERSON, ARCH./INT.
401 N. MICHIGAN AVE., CHICAGO, IL 60611

CALOR DESIGN GROUP, LTD., MEP/FP
2217 N. WESTERN AVE., CHICAGO, IL 60647

C. S. ASSOCIATES, INC., STRUC.
4532 W. 103RD ST., OAK LAWN, IL 60453

REV.	DATE	ISSUE
	14 AUG '15	BID AND PERMIT
	05 MAY '15	DESIGN DEVELOPMENT

DATE SIGNED:

Des Plaines Public Library Renovations

PROJECT NUMBER: 13300

WALL TYPE DETAILS

A9-1.0

ARCHITECTURE PLANNING INTERIORS

LOHAN ANDERSON

FIRST FLOOR FINISH SCHEDULE

ROOM NO.	ROOM NAME	FLOORING	N. WALL	S. WALL	W. WALL	E. WALL	BASE	TRIM	CEILING	CLG. HT.	REMARKS
1S3	STAIR #3	RF-2	N/A	N/A	N/A	N/A	WDB-1				ADD ALTERNATE #1 - FLOORING ONLY.
101	LOBBY	EXISTING/CPT-2	N/A	N/A	N/A	N/A	WDB-1				
102	LOBBY	EXISTING/QT-1	N/A	PT-2	N/A	N/A	WDB-1				
103	CORRIDOR	EXISTING/CPT-2	N/A	N/A	PT-1	PT-1	WDB-1/WDB-2				ADD ALTERNATE #3C - FLOORING ONLY.
104	CORRIDOR	CPT-2	PT-1	N/A	N/A	PT-1	WDB-1				ADD ALTERNATE #3C - FLOORING ONLY.
106	MEETING ROOM	EXISTING	PT-1/PT-2	PT-1/PT-2	EXISTING WRAPPED PANELS/PT-1/PT-2	PT-1/PT-2	WDB-1/WDB-2	WDT-1	PT-7		PT-1 ABOVE CHAIR RAIL PT-2 BELOW CHAIR RAIL
106a	VESTIBULE	QT-1	PT-9	PT-9	PT-9	PT-9	WDB-2		PT-7	9'-0"H	
101c	VESTIBULE	EXISTING/CPT-2	PT-3	N/A	PT-3	PT-3	RB-1				ADD ALTERNATE #3A - FLOORING AND BASE ONLY.
108	CIRCULATION WORKROOM	EXISTING/CPT-2	PT-3/FP-1	PT-3/FP-1	PT-3	PT-3	RB-1				ADD ALTERNATE #3A - FLOORING AND BASE ONLY. REFER TO FINISH PLAN FOR LOCATION OF FP-1.
108o	OFFICE	CPT-2	PT-5	WPT-1	PT-3	FP-1/PT-3	RB-2				REFER TO FINISH PLAN FOR LOCATION OF FP-1.
108n	CONF. ROOM	CPT-2	PT-5	PT-5	PT-5	PT-5	RB-2				REFER TO FINISH PLAN FOR LOCATION OF FP-1.
108j	OFFICE	CPT-2	PT-5	PT-3	FP-1/PT-3	WPT-1	RB-2				REFER TO FINISH PLAN FOR LOCATION OF FP-1.
111	TECH SERVICES	CPT-2	PT-3	PT-3	PT-3	PT-3/PT-6	RB-2			8'-0"H	REFER TO FINISH PLAN FOR LOCATION OF PT-6 ON EAST WALL. ACT TO BE REUSED FROM THROUGHOUT THE BUILDING AS NOTED ON PLANS.
108k	CORRIDOR	EXISTING/CPT-2	PT-3	PT-3	N/A	N/A	RB-1				ADD ALTERNATE #3A - FLOORING AND BASE ONLY.
118	GARAGE	EXISTING	PT-3	PT-3	PT-3	PT-3	N/A		NO CLNG		

SECOND FLOOR FINISH SCHEDULE

ROOM NO.	ROOM NAME	FLOORING	N. WALL	S. WALL	W. WALL	E. WALL	BASE	TRIM	CEILING	CLG. HT.	REMARKS
2S3	STAIR #3	RF-2	N/A	N/A	N/A	N/A	WDB-1				ADD ALTERNATE #1 - FLOORING ONLY.
201	CHILDRENS' COLLECTION AREA	CPT-1A	N/A	N/A	N/A	N/A	WDB-1				
201a	LOBBY	CPT-1A	N/A	N/A	N/A	N/A	WDB-1				
201b	VESTIBULE	CPT-1A	N/A	N/A	N/A	N/A	WDB-1				
201d	YOUTH COMPUTER AREA	CPT-1B	N/A	N/A	N/A	N/A	WDB-1				CEILING TILE TO BE PATCHED WHERE PROJECTION SCREEN IS INSTALLED.
201e	POET-TREE AREA	CPT-1A	N/A	N/A	N/A	N/A	RB-3/WDB-3				
203	VESTIBULE	CPT-1A	N/A	PT-3	PT-3	PT-3	WDB-1				
203e	LAVATORY	CT-1	CWT-1/PT-3	PT-3	CWT-1/PT-3	PT-3	CBT-1				REFER TO INTERIOR ELEVATIONS FOR LOCATION OF CWT-1 AND PT-3 ON NORTH AND WEST WALLS. ACT TO BE REUSED FROM THROUGHOUT THE BUILDING AS NOTED ON PLANS.
203f	ALCOVE	CPT-1B	PT-3	PT-3	PT-3	PT-3	WDB-2				

THIRD FLOOR FINISH SCHEDULE

ROOM NO.	ROOM NAME	FLOORING	N. WALL	S. WALL	W. WALL	E. WALL	BASE	TRIM	CEILING	CLG. HT.	REMARKS
3S3	STAIR #3	RF-2	N/A	N/A	N/A	N/A	WDB-1				ADD ALTERNATE #1 - FLOORING ONLY
301	ADULTS' COLLECTION AREA	CPT-3A	N/A	N/A	N/A	N/A	WDB-1				
301a	LOBBY	CPT-3A	N/A	N/A	N/A	N/A	WDB-1				
301b	STUDY RM.	CPT-3B	PT-3	PT-3	PT-3	PT-3	WDB-1				
301c	STUDY RM.	CPT-3B	PT-3	PT-3	PT-3	PT-3	WDB-1				
301d	STUDY RM.	CPT-3B	PT-3	PT-3	PT-3	PT-3	WDB-1				
301e	STUDY RM.	CPT-3B	PT-3	WPT-1	WPT-1	WPT-1	WDB-1				
302	VESTIBULE	CPT-3A	N/A	N/A	N/A	N/A	WDB-1				
303	THE COMMONS	CPT-3A/RF-1A/RF-1B	PT-4	WPT-1	PT-4/PT-3	PT-4/PT-3/PT-10	RB-2		ACT-1/PT-7	10'-6"H	REFER TO FINISH PLAN FOR LOCATION OF PT-3, PT-4 and PT-10 ON EAST AND WEST WALLS.
303a	THE COMMONS ALCOVE	CPT-3B	PT-3	PT-3	PT-4	N/A	WDB-1		PT-7	10'-6"H	
304	CREATIVE SERVICES OFFICE	EXISTING/CPT-2	PT-6	PT-3	PT-6/PT-3	PT-3	RB-1/RB-2				ADD ALTERNATE #3B - FLOORING AND BASE ONLY. PT-3 TO BE USED ON WEST WINDOW WALL.
305	VESTIBULE	CPT-3A	N/A	N/A	N/A	N/A	WDB-1				
306	ADULT SERVICES	EXISTING/CPT-2	PT-6/PT-3	PT-3	PT-3	PT-6/PT-3	RB-1/RB-2				ADD ALTERNATE #3B - FLOORING AND BASE ONLY. REFER TO FINISH PLAN FOR LOCATION OF PT-6 ON NORTH AND EAST WALLS.
306a	OFFICE	EXISTING/CPT-2	PT-6	WPT-1	FP-1/PT-3	PT-3	RB-1/RB-2				ADD ALTERNATE #3B - FLOORING AND BASE ONLY.

FOURTH FLOOR FINISH SCHEDULE

ROOM NO.	ROOM NAME	FLOORING	N. WALL	S. WALL	W. WALL	E. WALL	BASE	TRIM	CEILING	CLG. HT.	REMARKS
4S3	STAIR #3	RF-2	N/A	N/A	N/A	N/A	WDB-1				ADD ALTERNATE #1 - FLOORING ONLY.
401	ADULTS' COLLECTION AREA	CPT-4A	N/A	N/A/PT-8/PT-3	N/A	N/A	WDB-1				REFER TO FINISH PLANS FOR LOCATION OF PT-8 AND PT-3 ON SOUTH WALLS.
401a	LOBBY	CPT-4A	N/A	N/A	N/A	N/A	WDB-1				
401b	STUDY RM.	CPT-4B	PT-3	PT-3	PT-3	PT-3	WDB-1				
401c	STUDY RM.	CPT-4B	PT-3	PT-3	PT-3	PT-3	WDB-1				
401d	STUDY RM.	CPT-4B	PT-3	PT-3	PT-3	PT-3	WDB-1				
401e	THE FORUM	CPT-4B	PT-8	PT-8/PT-3/FP-2-7	PT-8	PT-8	WDB-1/WDB-2		ACT-1	9'-0"H	PT-3 TO BE USED ON COLUMNS
401f	OPEN AREA	CPT-4A	N/A	N/A	N/A	N/A	WDB-1				
401g	LOUNGE AREA	CPT-4A	N/A	N/A	N/A	N/A	WDB-1				
402	BUSINESS CENTER	CPT-4A	PT-3	PT-3	PT-3	PT-3	WDB-1				
403	INFORMATION TECH DEPT	CPT-4B	PT-6	PT-3	PT-3	PT-3	RB-2				
405	VESTIBULE	CPT-4A	PT-3	PT-3	PT-3	PT-3	WDB-1				
406	WORK CENTER	CPT-4A	PT-3	PT-3	PT-3	PT-3	WDB-2				
406b	WORK CENTER SUPPLY ROOM	CPT-4A	PT-3	PT-3	PT-3	PT-3	RB-2				
407	VESTIBULE	CPT-4A	PT-3	PT-3	PT-3	PT-3	WDB-1				

BOARD OF LIBRARY TRUSTEES OF THE CITY OF DES PLAINES, OWNER
1501 ELLINWOOD ST., DES PLAINES, IL 60016

LOHAN ANDERSON, ARCH./INT.
401 N. MICHIGAN AVE., CHICAGO, IL 60611

CALOR DESIGN GROUP, LTD., MEP/FP
2217 N. WESTERN AVE., CHICAGO, IL 60647

C. S. ASSOCIATES, INC., STRUC.
4532 W. 103RD ST., OAK LAWN, IL 60453

REV.	DATE	ISSUE
	14 AUG '15	BID & PERMIT
	05 MAY '15	DESIGN DEVELOPMENT

DATE SIGNED:

Des Plaines Public Library Renovations

PROJECT NUMBER: 13300

ROOM FINISH SCHEDULE

A9-2.0

TAG	LOCATION/USE	MANUFACTURER	STYLE/NAME NO	CONTACT	REMARKS
CARPET (TILE)					
CPT-1A	LOBBY (201a) CHILDRENS' COLLECTION AREA (201) VESTIBULE (201b) POET-TREE AREA (201e) VESTIBULE (203)	INTERFACE	COLLECTION: SILVER LININGS, SL920 LINE SAMPLE NUMBER:250379-033 PATTERN: M1073 STYLE NUMBER: 138780AK00 SL920 20Z * 25CM X 1M COLOR: 99 CLR TO BE ASSIGNED SIZE: 25CM X 1M (9.845" X 39.38") BACKING: GLASBAC INSTALLATION METHOD: ASHLAR	JOE FOLEY 345 N. WELLS, 3RD FLOOR CHICAGO, IL 60654 312-961-7046 JOE.FOLEY@INTERFACE.COM	MATCH ARCHITECT'S SAMPLE. SAMPLE & INSTALLATION DRAWINGS REQUIRED
CPT-1B	YOUTH COMPUTER AREA (201d) ALCOVE (203f)	INTERFACE	COLLECTION: SILVER LININGS, SL930 FADE SAMPLE NUMBER: 250379-028 PATTERN: M1078 STYLE NUMBER: 138790AK00 SL930 21Z * 25CM x 1M COLOR: 99 CLR TO BE ASSIGNED SIZE: 25CM X 1M (9.845" X 39.38") BACKING: GLASBAC INSTALLATION METHOD: ASHLAR	JOE FOLEY 345 N. WELLS, 3RD FLOOR CHICAGO, IL 60654 312-961-7046 JOE.FOLEY@INTERFACE.COM	MATCH ARCHITECT'S SAMPLE. SAMPLE & INSTALLATION DRAWINGS REQUIRED
CPT-2	CORRIDOR (103) CORRIDOR (104) VESTIBULE (101c) CIRCULATION WORKROOM (108) OFFICE (108o) CONFERENCE ROOM (108n) OFFICE (108j) CORRIDOR (108k) TECHNICAL SERVICES (111) CREATIVE SERVICES OFFICE (304) ADULT SERVICES (306) OFFICE (306a)	INTERFACE	COLLECTION: TATAMI II STYLE #: 1415502500 COLOR: 100498 ACMORI SIZE: 50CM X 50CM INSTALLATION METHOD: -TO MATCH EXISTING METHOD AT PATCH LOCATIONS -TECHNICAL SERVICES (111): ASHLAR -OFFICES 108o, 108j: ASHLAR -CONFERENCE ROOM 108n: ASHLAR	JOE FOLEY 345 N. WELLS, 3RD FLOOR CHICAGO, IL 60654 312-961-7046 JOE.FOLEY@INTERFACE.COM	MATCH ARCHITECT'S SAMPLE. NOTE: CPT-2 IS AN ADD ALTERNATE IN SPECIFIC ROOMS. SEE SCHEDULE OF ADD ALTERNATES. SAMPLE & INSTALLATION DRAWINGS REQUIRED
CPT-3A	LOBBY (301a) ADULTS' COLLECTION AREA (301) VESTIBULE (302) THE COMMONS (303) VESTIBULE (305)	INTERFACE	COLLECTION: SILVER LININGS, SL920 LINE SAMPLE NUMBER: 250379-029 PATTERN: M1073 STYLE NUMBER: 138780AK00 SL920 20Z * 25CM X 1M COLOR: 99 CLR TO BE ASSIGNED SIZE: 25CM X 1M (9.845" X 39.38") BACKING: GLASBAC INSTALLATION METHOD: ASHLAR	JOE FOLEY 345 N. WELLS, 3RD FLOOR CHICAGO, IL 60654 312-961-7046 JOE.FOLEY@INTERFACE.COM	MATCH ARCHITECT'S SAMPLE. SAMPLE & INSTALLATION DRAWINGS REQUIRED
CPT-3B	THE COMMONS ALCOVE (303a) STUDY ROOMS (301b, 301c, 301d, 301e)	INTERFACE	COLLECTION: SILVER LININGS, SL930 FADE SAMPLE NUMBER: 250379-021 PATTERN: M1078 STYLE NUMBER: 138790AK00 SL930 21Z * 25CM X 1M COLOR: 99 CLR TO BE ASSIGNED SIZE: 25CM X 1M (9.845" X 39.38") BACKING: GLASBAC INSTALLATION METHOD: ASHLAR	JOE FOLEY 345 N. WELLS, 3RD FLOOR CHICAGO, IL 60654 312-961-7046 JOE.FOLEY@INTERFACE.COM	MATCH ARCHITECT'S SAMPLE. SAMPLE & INSTALLATION DRAWINGS REQUIRED
CPT-4A	LOBBY (401a) ADULTS' COLLECTION AREA (401) OPEN AREA (401f) LOUNGE AREA (401g) BUSINESS CENTER (402) VESTIBULE (405) WORK CENTER (406) WORK CENTER SUPPLY ROOM (406b) VESTIBULE (407)	INTERFACE	COLLECTION: SILVER LININGS, SL920 LINE SAMPLE NUMBER: 250379-031 PATTERN: M1073 STYLE NUMBER: 138780AK00 SL920 20Z * 25CM X 1M COLOR: 99 CLR TO BE ASSIGNED SIZE: 25CM X 1M (9.845" X 39.38") BACKING: GLASBAC INSTALLATION METHOD: ASHLAR	JOE FOLEY 345 N. WELLS, 3RD FLOOR CHICAGO, IL 60654 312-961-7046 JOE.FOLEY@INTERFACE.COM	MATCH ARCHITECT'S SAMPLE. SAMPLE & INSTALLATION DRAWINGS REQUIRED
CPT-4B	STUDY ROOMS (401b, 401c, 401d) INFORMATION TECH DEPT (403) THE FORUM (401e)	INTERFACE	COLLECTION: SILVER LININGS, SL930 FADE SAMPLE NUMBER: 250379-025 PATTERN: M1078 STYLE NUMBER: 138790AK00 SL930 21Z * 25CM X 1M COLOR: 99 CLR TO BE ASSIGNED SIZE: 25CM X 1M (9.845" X 39.38") BACKING: GLASBAC INSTALLATION METHOD: ASHLAR	JOE FOLEY 345 N. WELLS, 3RD FLOOR CHICAGO, IL 60654 312-961-7046 JOE.FOLEY@INTERFACE.COM	MATCH ARCHITECT'S SAMPLE. SAMPLE & INSTALLATION DRAWINGS REQUIRED
CERAMIC TILE					
CT-1	LAVATORY (203a)	DALTILE	COLLECTION: KEYSTONES STYLE: MOSAIC COLORBODY PORCELAIN TILE COLOR: ARCHITECTURAL GRAY, D109 SIZE: 2" X 2" MOSAIC TILE GROUT JOINT: 1/8" GROUT COLOR: TO MATCH ARCHITECT'S SAMPLE	JENELLE FRANCOIS 316 W. HUBBARD ST. CHICAGO, IL 60654 312-714-8216 JENELLE.FRANCOIS@DALTILE.COM	SAMPLE & INSTALLATION DRAWINGS REQUIRED
QUARRY TILE					
QT - 1	VESTIBULE (108a)	METROPOLITAN CERAMICS	PRODUCT: QUARRYBASICS CLEAR TONES COLOR: 105 BUCKSKIN SIZE: 8" X 8" GROUT JOINT AND COLOR: TO MATCH EXISTING IN LOBBY 102	TERRIE CHASTAIN IRONROCK 330-484-7457 TERRIE@ IRONROCK.COM	SAMPLE & INSTALLATION DRAWINGS REQUIRED
PAINT					
PT-1	CORRIDOR (103) & (104) MEETING ROOM (106) AS NOTED	BENJAMIN MOORE	TO MATCH - BENJAMIN MOORE, COLOR: MANCHESTER TAN, HC-81 FINISH: SATIN EGGSHELL	JASON WALKER 773-597-8698 JASON.WALKER@BENJAMINMOORE.COM	DRAWDOWNS REQUIRED ALL PAINT MEETING ROOM (106) - ABOVE CHAIR RAIL.
PT-2	LOBBY (102), MEETING ROOM (106) AS NOTED	BENJAMIN MOORE	TO MATCH - BENJAMIN MOORE COLOR: GRANT BEIGE, HC-83 FINISH: SATIN EGGSHELL	JASON WALKER 773-597-8698 JASON.WALKER@BENJAMINMOORE.COM	MEETING ROOM (106) - BELOW CHAIR RAIL.
PT-3	BASE FINISH THROUGHOUT AS NOTED	BENJAMIN MOORE	TO MATCH - BENJAMIN MOORE COLOR: GLACIER WHITE, OC-37 FINISH: SATIN EGGSHELL & SEMI-GLOSS AT TOILET ROOMS	JASON WALKER 773-597-8698 JASON.WALKER@BENJAMINMOORE.COM	TYPICALLY WALLS TO BE SATIN EGGSHELL FINISH SEMI-GLOSS FINISH REQUIRED TOILET ROOMS
PT-4	THE COMMONS (303) AS NOTED	BENJAMIN MOORE	TO MATCH - BENJAMIN MOORE COLOR: SUMMER NIGHTS, #777 FINISH: SATIN EGGSHELL	JASON WALKER 773-597-8698 JASON.WALKER@BENJAMINMOORE.COM	
PT-5	OFFICE (108o), CONFERENCE ROOM (108n), OFFICE (108j) AS NOTED	BENJAMIN MOORE	TO MATCH - BENJAMIN MOORE COLOR: BOOTHBAY GRAY, HC-165 FINISH: SATIN EGGSHELL	JASON WALKER 773-597-8698 JASON.WALKER@BENJAMINMOORE.COM	
PT-6	TECHNICAL SERVICES (111), CREATIVE SERVICES OFFICE (304), ADULT SERVICES (306), OFFICE (306a), INFORMATION TECH DEPT (403) AS NOTED	BENJAMIN MOORE	TO MATCH - BENJAMIN MOORE COLOR: YARMOUTH BLUE, HC-150 FINISH: SATIN EGGSHELL	JASON WALKER 773-597-8698 JASON.WALKER@BENJAMINMOORE.COM	
PT-7	CEILING - GYPSUM BOARD	BENJAMIN MOORE	TO MATCH - BENJAMIN MOORE COLOR: CHANTILLY LACE, OC-65 FINISH: SATIN EGGSHELL	JASON WALKER 773-597-8698 JASON.WALKER@BENJAMINMOORE.COM	TYPICALLY WALLS TO BE SATIN EGGSHELL FINISH SEMI-GLOSS FINISH REQUIRED TOILET ROOMS
PT-8	FORUM (401e) AS NOTED	BENJAMIN MOORE	TO MATCH - BENJAMIN MOORE COLOR: SHY CHERRY, 2007-20 FINISH: SATIN EGGSHELL	JASON WALKER 773-597-8698 JASON.WALKER@BENJAMINMOORE.COM	TYPICALLY WALLS TO BE SATIN EGGSHELL FINISH SEMI-GLOSS FINISH REQUIRED TOILET ROOMS
PT-9	VESTIBULE (108a) AS NOTED	BENJAMIN MOORE	TO MATCH - BENJAMIN MOORE COLOR: GUILFORD GREEN, HC-116, FINISH: SATIN EGGSHELL	JASON WALKER 773-597-8698 JASON.WALKER@BENJAMINMOORE.COM	TYPICALLY WALLS TO BE SATIN EGGSHELL FINISH SEMI-GLOSS FINISH REQUIRED TOILET ROOMS
PT-10	THE COMMONS (303) AS NOTED	BENJAMIN MOORE	TO MATCH - BENJAMIN MOORE COLOR: GRAPE GREEN, 2027-40 FINISH: SATIN EGGSHELL	JASON WALKER 773-597-8698 JASON.WALKER@BENJAMINMOORE.COM	
WRITEABLE PAINT					
WPT-1	ROTARY ROOM (301e), THE COMMONS (303), OFFICES (108o, 108j AND 306a) AS NOTED	IDEAPAINT	IDEAPAINT CREATE CLEAR DRY ERASE PAINT TO BE APPLIED OVER PT-3 BENJAMIN MOORE COLOR: GLACIER WHITE, OC-37 FINISH: SEMI-GLOSS LATEX	REID RUBERTI 617-714-1086 RRUBERTI@IDEAPAINT.COM	DRAWDOWN & MOCKUP REQUIRED
PLASTIC LAMINATE CLAD CABINETRY\ COUNTERTOPS \ OPEN SHELVING \ SURROUNDS					
PL-1	TECHNICAL SERVICES (111) CREATIVE SERVICES OFFICE (304) ADULT SERVICES (306) COMMONS (303) INFORMATION TECH DEPT (403)	NEVAMAR	PRODUCT: HIGH PRESSURE LAMINATE STYLE: CALM DISTINCTION, VA8001T FINISH: TEXTURED	ANN MARIE MATHEWS PANOLAM SURFACE SYSTEMS 20 PROGRESS DRIVE SHELTON, CT 06484 C: 224-213-3760 ANNMARIE_MATHEWS@PANOLAM.COM	SAMPLE SUBMITTALS & SHOP DRAWINGS REQUIRED FOR ALL MILLWORK
PL-2	LOBBY (101)	NEVAMAR	PRODUCT: HIGH PRESSURE LAMINATE STYLE: SILVERLINE HAUTELINK, HLT004T FINISH: TEXTURED	ANN MARIE MATHEWS PANOLAM SURFACE SYSTEMS 20 PROGRESS DRIVE SHELTON, CT 06484 C: 224-213-3760 ANNMARIE_MATHEWS@PANOLAM.COM	SELF CHECK IN AREA, IF REQUIRED SECURITY DESK COUNTERTOP EDGE DETAIL - MAPLE HARDWOOD. MATCH ARCHITECT'S SAMPLE
PL-3	VESTIBULE (108a)	WILSONART	PRODUCT: HIGH PRESSURE LAMINATE STYLE: BURNISHED CHESTNUT, 4798-60 FINISH: MATTE	BRITTNEY STAHL AETNA PLYWOOD 1401 ST CHARLES ROAD MAYWOOD, IL 60153 C: 312-493-5976 BRITTNEYSTAHL@AETNAPLYWOOD.COM	
PL- 4	INFORMATION DESK - 2ND, 3RD, 4TH FLOOR	NEVAMAR	PRODUCT: HIGH PRESSURE LAMINATE STYLE: KOPI SUSU, LN8002T FINISH: TEXTURED	ANN MARIE MATHEWS PANOLAM SURFACE SYSTEMS 20 PROGRESS DRIVE SHELTON, CT 06484 C: 224-213-3760 ANNMARIE_MATHEWS@PANOLAM.COM	FRONT INSET PANELS, SEE ELEVATIONS
PL-5	INFORMATION DESK - 2ND FLOOR CENTER SURROUND	NEVAMAR	PRODUCT: HIGH PRESSURE LAMINATE STYLE: DEEP BLUE, S3022T FINISH: TEXTURED	ANN MARIE MATHEWS PANOLAM SURFACE SYSTEMS 20 PROGRESS DRIVE SHELTON, CT 06484 C: 224-213-3760 ANNMARIE_MATHEWS@PANOLAM.COM	
PL-6	INFORMATION DESK - 3RD FLOOR CENTER SURROUND COMMONS (303)- CRAFT TABLE BASE	FORMICA	PRODUCT: HIGH PRESSURE LAMINATE STYLE: ARTICHOKE, 800-58 FINISH: MATTE	MINDY SINZHEIMER T: 773-209-6400 MINDY.SINZHEIMER@FORMICA.COM	
PL-7	INFORMATION DESK - 4TH FLOOR CENTER SURROUND	WILSONART	PRODUCT: HIGH PRESSURE LAMINATE STYLE: PORT, D14-60 FINISH: MATTE	BRITTNEY STAHL AETNA PLYWOOD 1401 ST CHARLES ROAD MAYWOOD, IL 60153 C: 312-493-5976 BRITTNEYSTAHL@AETNAPLYWOOD.COM	
PL-8	TECHNICAL SERVICES (111) CREATIVE SERVICES (304) ADULT SERVICES (306) COMMONS (303) COMMONS ALCOVE (303a) INFORMATION TECH DEPT (403)	FORMICA	PRODUCT: HIGH PRESSURE LAMINATE STYLE: FOLKSTONE, 927-58 FINISH: MATTE	MINDY SINZHEIMER T: 773-209-6400 MINDY.SINZHEIMER@FORMICA.COM	OPEN SHELVING, SHELVING UNITS, COUNTERTOP, BOOKCASES - SEE INTERIOR ELEVATIONS
EPOXY RESIN SOLID SURFACE COUNTERTOPS					
EPS-1	TECH SERVICES (111) COMMONS (303) CREATIVE SERVICES (304) ADULT SERVICES (306) INFORMATION TECH DEPT (403)	DURCON, INC.	COLOR: GRAPHITE THICKNESS: 1" SEAMING: EPOXY COLOR TO MATCH BASE COLOR SEAM NOT TO EXCEED 1/16"	DURCON INC. 206 ALLISON DR. TAYLOR, TX 76574 T. 512.595.8000 EMAIL: SALES@DURCON.COM	1" THICK MATERIAL TO BE USED FOR COUNTERTOPS; WITH EASED SQUARE EDGE DETAIL. SAMPLE SUBMITTALS & SHOP DRAWINGS REQUIRED FOR ALL MILLWORK
QUARTZ SOLID SURFACE COUNTERTOPS					
QSS-1	VESTIBULE (108a)	DUPONT ZODIAQ	COLOR: CREMA MARFIL THICKNESS: 3CM, 1 1/8" SEAMING: EPOXY COLOR TO MATCH BASE COLOR	AUDRA MIKA PARKSITE 1400 REMINGTON BLVD. BOLINGBROOK, IL 60490 T: 800-338-3355 C: 224-407-0034 AMIKA@PARKSITE.COM	3CM THICK MATERIAL TO BE USED FOR COUNTERTOPS; WITH EASED SQUARE EDGE DETAIL. SAMPLE SUBMITTALS & SHOP DRAWINGS REQUIRED FOR ALL MILLWORK
SOLID SURFACE COUNTERTOPS/ SURROUNDS					
SS-1	INFORMATION DESKS E-BAR AT ADULT COLLECTIONS (301) COMMONS (303) AT GAMING CABINET	DUPONT CORIAN	COLOR: PEARL GRAY THICKNESS: 3CM, 1 1/8" SEAMING: EPOXY COLOR TO MATCH BASE COLOR	AUDRA MIKA PARKSITE 1400 REMINGTON BLVD. BOLINGBROOK, IL 60490 T: 800-338-3355 C: 224-407-0034 AMIKA@PARKSITE.COM	3CM THICK MATERIAL TO BE USED FOR COUNTERTOPS; WITH EASED SQUARE EDGE DETAIL. SAMPLE SUBMITTALS & SHOP DRAWINGS REQUIRED FOR ALL MILLWORK
NATURAL STONE TRANSACTION COUNTERTOP					
ST-1	EXISTING TO BE REFINISHED	EXISTING	GRIND SMOOTH TO A HONED FINISH - EXISTING TRANSACTION COUNTER TOP. SEAM EPOXY COLOR TO MATCH BASE COLOR OF STONE.	GARY VALENTE DES PLAINES PUBLIC LIBRARY T. 847.376.2781	CONTRACTOR TO TEST OWNER ATTIC STOCK STONE SLAB FOR HONED FINISH PRIOR TO PROCEEDING WITH WORK. APPROVALS REQUIRED. WORK TO INCLUDE REMOVAL OF EXISTING, SHOP REFINISH, & REINSTALLATION OF THE TRANSACTION COUNTER.
ST-2	ADD ALTERNATE - LOBBY (101) CIRCULATION DESK TRANSACTION COUNTERTOP	STONE SOURCE	PRODUCT: LIMESTONE COLOR: RAMON YELLOW MEDIUM SEAM EPOXY COLOR TO MATCH BASE COLOR OF STONE. SUBMIT SAMPLE FOR ARCHITECT REVIEW.	RONDA MARR STONE SOURCE 414 NORTH ORLEANS, SUITE 403 CHICAGO, IL60654 T: 312-970-5693 RMARR@STONESOURCE.COM	3CM THICK MATERIAL TO BE USED FOR COUNTERTOPS; WITH EASED SQUARE EDGE DETAIL.
RESILIENT FLOORING					
RF-1A	THE COMMONS (303)	SHAW HARD SURFACE	STYLE NAME: PIGMENT STYLE NO: 0365V COLOR NAME: CHARCOAL COLOR NO.: 65595 SIZE: 7"X48" NOMINAL CONSTRUCTION: 20 MIL ADHERED LVT INSTALLATION: ASHLAR, RANDOM PATTERN, ALTERNATING WITH RF-1B	KATE BUKOWSKI 222 W. MERCHANDISE MART, SUITE 10-167 CHICAGO, IL 60654 C: 312.882.8478 EMAIL: KATE.BUKOWSKI@SHAWINC.COM	SAMPLE & INSTALLATION DRAWINGS REQUIRED
RF-1B	THE COMMONS (303)	SHAW HARD SURFACE	STYLE NAME: PIGMENT STYLE NO: 0365V COLOR NAME: GREY COLOR NO.: 55530 SIZE: 7"X48" NOMINAL CONSTRUCTION: 20 MIL ADHERED LVT INSTALLATION: ASHLAR, RANDOM PATTERN, ALTERNATING WITH RF-1A	KATE BUKOWSKI 222 W. MERCHANDISE MART, SUITE 10-167 CHICAGO, IL 60654 C: 312.882.8478 EMAIL: KATE.BUKOWSKI@SHAWINC.COM	SAMPLE & INSTALLATION DRAWINGS REQUIRED
RF-2	RUBBER TREAD WITH RISER-EXISTING ATRIUM STAIRWELL (1S3, 2S3, 3S3 AND 4S3)	JOHNSONITE	PRODUCT: VISUALLY IMPAIRED RUBBER STAIR TREAD WITH INTEGRATED RISER TEXTURE: RICE PAPER COLOR: 20 CHARCOAL WIDTH: VERIFY EXISTING STAIR IN THE FIELD VISUALLY IMPAIRED: VIFRPATR - A GRIT TAPE: GRAY LANDING TILE: RICE PAPER, 24"X24" LANDING TILE COLOR: 20 CHARCOAL NOSING: 2"	KELLI MILDREN E.J. WELCH COMPANY 2601 LIVELY BLVD ELK GROVE VILLAGE, IL 60007 C: 630-390-5408 KMILDREN@EJWELCH.COM	
RESILIENT BASE AND ACCESSORIES					
RB - 1	MATCH EXISTING RUBBER BASE FOR AREAS REQUIRE PATCH REPAIR EXISTING CARPET.	JOHNSONITE	MATCH EXISTING RUBBER WALL BASE - 2" HIGH	KELLI MILDREN E.J. WELCH COMPANY 2601 LIVELY BLVD ELK GROVE VILLAGE, IL 60007 C: 630-390-5408 KMILDREN@EJWELCH.COM	ADD ALTERNATE CARPET AREAS TO USE RB-2
RB - 2	TECHNICAL SERVICES (111) COMMONS (303) INFO TECH DEPT (403) ADD ALTERNATE AREAS	JOHNSONITE	RUBBER WALL BASE - 4" HIGH, COLOR: 20 CHARCOAL OR EQUAL AS APPROVED BY ARCHITECT	KELLI MILDREN E.J. WELCH COMPANY 2601 LIVELY BLVD ELK GROVE VILLAGE, IL 60007 C: 630-390-5408 KMILDREN@EJWELCH.COM	ADD ALTERNATE CARPET AREAS TO USE RB-2
RB-3	VINYL STAIR NOSING - CONTINUOUS CURVE @ POET-TREE AREA (201e)	JOHNSONITE	PRODUCT: SOLID COLOR FLEXIBLE VINYL STAIR NOSINGS TYPE: 3/8" MATERIAL ON STEP & RISER PRODUCT NO.: SVCD-20-A COLOR: 20 CHARCOAL	KELLI MILDREN E.J. WELCH COMPANY 2601 LIVELY BLVD ELK GROVE VILLAGE, IL 60007 C: 630-390-5408 KMILDREN@EJWELCH.COM	
WOOD BASE & TRIM					
WDB-1	EXISTING TO REMAIN	EXISTING	TO MATCH ARCHITECT'S SAMPLE, WHITE MAPLE HARDWOOD, FSC CERTIFIED OR EQUAL AS APPROVED BY ARCHITECT	MARGARET FISHER LANGE BROS. WOODWORK CO., INC. 3920 W. DOUGLAS AVE. MILWAUKEE, WI 53209 T: 414-466-2226 x121 C: 414-315-4666 MARGARET@LANGEBROS.COM	SAMPLE SUBMITTALS & SHOP DRAWINGS REQUIRED FOR ALL MILLWORK
WDB-2	VESTIBULE (108a) MEETING ROOM (106) PUBLIC AREAS AS REQUIRED		TO MATCH EXISTING BASE/ARCHITECT'S SAMPLE, HARDWOOD WHITE MAPLE, FSC CERTIFIED OR EQUAL AS APPROVED BY ARCHITECT.	MARGARET FISHER LANGE BROS. WOODWORK CO., INC. 3920 W. DOUGLAS AVE. MILWAUKEE, WI 53209 T: 414-466-2226 x121 C: 414-315-4666 MARGARET@LANGEBROS.COM	
WDT-1	MEETING ROOM (106)		TO MATCH ARCHITECT'S SAMPLE, HARDWOOD WHITE MAPLE, FSC CERTIFIED OR EQUAL AS APPROVED BY ARCHITECT.	MARGARET FISHER LANGE BROS. WOODWORK CO., INC. 3920 W. DOUGLAS AVE. MILWAUKEE, WI 53209 T: 414-466-2226 x121 C: 414-315-4666 MARGARET@LANGEBROS.COM	SEE INTERIOR ELEVATIONS & MILLWORK DETAILS
METAL BASE					
MB-1	INFORMATION DESKS	CHEMETAL	PRODUCT: STAINLESS AMBIENT ALUMINUM COLOR: 929 SIZE: 4" HIGH LENGTH: SEE INTERIOR ELEVATIONS AND MILLWORK DETAILS.	KATHIE MOORE PARKWOOD CHICAGO, INC. 2100 FOSTER AVENUE WHEELING, IL 60090 T: 847-577-5001 KMOORE@PARKWOODCHICAGO.COM	
CERAMIC WALL TILE & WALL BASE					
CWT-1	LAVATORY (203a)	DALTILE	COLLECTION: RITTENHOUSE SQUARE TYPE: SEMI-GLOSS FIELD TILE COLOR: K175 BISCUIT (2) SIZE: 3X6 GROUT: 1/16" GROUT COLOR: MATCH ARCHITECT'S SAMPLE INSTALLATION: RUNNING BOND AS PER MANUFACTURER'S INSTRUCTIONS TRIM: BULLNOSE S-4369 (ON 6" SIDE) TRIM: BULLNOSE CORNER SCRL-4369	JENELLE FRANCOIS 316 W. HUBBARD ST. CHICAGO, IL 60654 312-714-8215 JENELLE.FRANCOIS@DALTILE.COM	RUNNING BOND: STAGGER OVERLAP NOT TO EXCEED 33% SAMPLE & INSTALLATION DRAWINGS REQUIRED
CTB-1	LAVATORY (203a)	DALTILE	COLLECTION: RITTENHOUSE SQUARE TYPE: SEMI-GLOSS FIELD TILE COLOR: K175 BISCUIT (2) SIZE: 3X6 GROUT: 1/16" GROUT COLOR: MATCH ARCHITECT'S SAMPLE TRIM: COVE BASE A-3361 TRIM: COVE BASE CORNER SCR/L-3361	JENELLE FRANCOIS 316 W. HUBBARD ST. CHICAGO, IL 60654 312-714-8215 JENELLE.FRANCOIS@DALTILE.COM	SAMPLE & INSTALLATION DRAWINGS REQUIRED
MILLWORK WALL PANELS/CABINETRY WOOD VENEER AND SOLIDS					
WD-1	E-BAR @ ADULT COLLECTIONS (301)		TO MATCH ARCHITECT'S SAMPLE, WHITE MAPLE VENEER, FSC CERTIFIED OR EQUAL AS APPROVED BY ARCHITECT , PLAIN SLICED, FINISH - SATIN SHEEN 20.	MARGARET FISHER LANGE BROS. WOODWORK CO., INC. 3920 W. DOUGLAS AVE. MILWAUKEE, WI 53209 T: 414-466-2226 x121 C: 414-315-4666 MARGARET@LANGEBROS.COM	SAMPLE SUBMITTALS & SHOP DRAWINGS REQUIRED FOR ALL MILLWORK
WD-2	LOBBY (101)		TO MATCH EXISTING CIRCULATION DESK, FIGURED ANIGRE VENEER, FSC CERTIFIED OR EQUAL AS APPROVED BY ARCHITECT	MARGARET FISHER LANGE BROS. WOODWORK CO., INC. 3920 W. DOUGLAS AVE. MILWAUKEE, WI 53209 T: 414-466-2226 x121 C: 414-315-4666 MARGARET@LANGEBROS.COM	SAMPLE SUBMITTALS & SHOP DRAWINGS REQUIRED FOR ALL MILLWORK CIRCULATION WORK AREA SECURITY DESK
MILLWORK ACCESSORIES & HARDWARE					
WP-1	MILLWORK CABINETS VARIOUS LOCATIONS	DOUG MOCKETT	DRAWER PULL: DP105A/2 SIZE: 4 3/16" LONG, 3/8" SQUARE FINISH: 26 M - MATTE CHROME	DOUG MOCKETT & COMPANY, INC. T: 800-523-1269 INFO@MOCKETT.COM	
ACOUSTICAL TILE CEILING					
ACT-1	COMMONS (303) FORUM (401e)	ARMSTRONG	PRODUCT: OPTIMA TYPE: SQUARE TEGULAR IN 9/16" SIZE: 24X24 NRC: .90 / AC: 190 GRID: REUSE OF EXISTING 9/16" WITH 1/8" REVEAL	TIM A. LEWANDOWSKI 2500 COLUMBIA AVENUE LANCASTER, PA 17603 T: 815-354-2421 TALEWANDOWSKI@ARMSTRONG.COM	
RESIN PANEL					
RP-1	THE COMMONS (303) THE COMMONS ALCOVE (303a)	3FORM	MATERIAL: STRUTTURA STYLE: MONSOON + FLOAT SMALL + MONSOON FRONT FINISH: PATENT BACK FINISH: PATENT COLOR CAPPED END COLOR: MONSOON GAUGE: 3/8"	CHRIS JANSON 1348 BONNIE GLEN LANE GLENVIEW, IL 60025 T: 773-368-6770 CHRIS.JANSON@3-FORM.COM	SEE MILLWORK INTERIOR ELEVATIONS AND DETAIL DRAWINGS. MOCKUP REQUIRED, 1 SHELF UNIT
RP-2	THE COMMONS (303) THE COMMONS ALCOVE (303a)	3FORM	MATERIAL: STRUTTURA STYLE: MOSS + FLOAT SMALL + MOSS FRONT FINISH: PATENT BACK FINISH: PATENT COLOR CAPPED END COLOR: MOSS GAUGE: 3/8"	CHRIS JANSON 1348 BONNIE GLEN LANE GLENVIEW, IL 60025 T: 773-368-6770 CHRIS.JANSON@3-FORM.COM	SEE MILLWORK INTERIOR ELEVATIONS AND DETAIL DRAWINGS. MOCKUP REQUIRED, 1 SHELF UNIT
HORIZONTAL LOUVER BLINDS					
WIN COV-1	OFFICES (108o AND 108j)	SPRINGS WINDOW FASHIONS BALI ALUMINUM	1" HORIZONTAL ALUMINUM SLATS, COLOR: STANDARD MANUFACTURER OFFERINGS AS APPROVED BY ARCHITECT	PATRICK MOONEY 7549 GRABER ROAD MIDDLETON, WI 53562 C: 219-508-9088 PATRICK.MOONEY@SWFCONTRACT.COM	
WALL PROTECTION					
CG-1	TECH SERVICES (111)	C/S ACROVYN	PRODUCT: 3 1/2" FULL HEIGHT SURFACE MOUNTED CHANNEL GUARD. MODEL NO. SCO-8 FINISH: #4 SATIN GAUGE: 16 TYPE: #304 ALLOY INSTALLATION: SURFACE MOUNT, ADHESIVE	C/S MUNCY, PA 6596 STATE ROUTE 405 MUNCY, PA 17756 T: 800-233-8493	
FELT WALL & ACOUSTICAL PANELS					
FP-1	OFFICE (108o AND 108 j) ADULT SERVICES (306a) CIRCULATION WORKROOM (108)	FILZFELT & FORBO	PRODUCT: FILZFELT COLOR: 540 OZEAN THICKNESS: 1/8" (3MM) EDGE: WRAPPED ADHERED TO : FORBO BULLETIN BOARD PRODUCT NO.2186	FILZFELT: AMY MAYER T. 312.454.7000 AMAYER@SPINNEYBECK.COM FORBO: KIM MURPHY T: 847-691-7021 KIMBERLY.MURPHY@FORBO.COM	MOCKUP REQUIRED - 1 PANEL
FP-2	FORUM (401e)	FILZFELT	PRODUCT: FILZFELT AKUSTIKA SHAPE: HEXAGON SIZE: REFER TO INTERIOR ELEVATIONS ACOUSTIC SUBSTRATE THICKNESS: 1/2" FELT COLOR: 425 TAUBENGRAU THICKNESS: 1/8" (3MM) EDGE: WRAPPED MOUNTING: Z-CLIP	AMY MAYER T. 312.454.7000 AMAYER@SPINNEYBECK.COM	MOCKUP REQUIRED - 1 PANEL
FP-3	FORUM (401e)	FILZFELT	PRODUCT: FILZFELT AKUSTIKA SHAPE: HEXAGON SIZE: REFER TO INTERIOR ELEVATIONS ACOUSTIC SUBSTRATE THICKNESS: 1/2" FELT COLOR: 179 HELLROT THICKNESS: 1/8" (3MM) EDGE: WRAPPED MOUNTING: Z-CLIP	AMY MAYER T. 312.454.7000 AMAYER@SPINNEYBECK.COM	MOCKUP REQUIRED - 1 PANEL
FP-4	FORUM (401e)	FILZFELT	PRODUCT: FILZFELT AKUSTIKA SHAPE: HEXAGON SIZE: REFER TO INTERIOR ELEVATIONS ACOUSTIC SUBSTRATE THICKNESS: 1/2" FELT COLOR: 423 HELLGRAU THICKNESS: 1/8" (3MM) EDGE: WRAPPED MOUNTING: Z-CLIP	AMY MAYER T. 312.454.7000 AMAYER@SPINNEYBECK.COM	MOCKUP REQUIRED - 1 PANEL
FP-5	FORUM (401e)	FILZFELT	PRODUCT: FILZFELT AKUSTIKA SHAPE: HEXAGON SIZE: REFER TO INTERIOR ELEVATIONS ACOUSTIC SUBSTRATE THICKNESS: 1/2" FELT COLOR: 201 ROT THICKNESS: 1/8" (3MM) EDGE: WRAPPED MOUNTING: Z-CLIP	AMY MAYER T. 312.454.7000 AMAYER@SPINNEYBECK.COM	MOCKUP REQUIRED - 1 PANEL
FP-6	FORUM (401e)	FILZFELT	PRODUCT: FILZFELT AKUSTIKA SHAPE: HEXAGON SIZE: REFER TO INTERIOR ELEVATIONS ACOUSTIC SUBSTRATE THICKNESS: 1/2" FELT COLOR: 173 MANGO THICKNESS: 1/8" (3MM) EDGE: WRAPPED MOUNTING: Z-CLIP	AMY MAYER T. 312.454.7000 AMAYER@SPINNEYBECK.COM	MOCKUP REQUIRED - 1 PANEL
FP-7	FORUM (401e)	FILZFELT	PRODUCT: FILZFELT AKUSTIKA SHAPE: HEXAGON SIZE: REFER TO INTERIOR ELEVATIONS ACOUSTIC SUBSTRATE THICKNESS: 1/2" FELT COLOR: 100 WOLLWEIS THICKNESS: 1/8" (3MM) EDGE: WRAPPED MOUNTING: Z-CLIP	AMY MAYER T. 312.454.7000 AMAYER@SPINNEYBECK.COM	MOCKUP REQUIRED - 1 PANEL
FP-8	COMMON ALCOVE (303a)	FILZFELT	PRODUCT: FILZFELT COLOR: 423 HELLGRAU THICKNESS: 1/8" (3MM) ADHERED TO : SUBSTRATE OF SHELVING UNIT. SEE INTERIOR ELEVATION SHEET.	AMY MAYER T. 312.454.7000 AMAYER@SPINNEYBECK.COM	MOCKUP REQUIRED - 2' x 2'PANEL

FINISH LEGEND	
CPT	CARPET TILE
CT	CERAMIC TILE
QT	QUARRY TILE
PT	PAINT
WPT	WRITABLE PAINT
PL	PLASTIC LAMINATE
EPS	EPOXY RESIN SOLID SURFACE
QSS	QUARTZ SOLID SURFACE
SS	SOLID SURFACE
ST	NATURAL STONE
RF	RESILIENT FLOORING
RB	RESILIENT BASE AND ACCESSORIES
WDB	WOOD BASE
WDT	WOOD TRIM
MB	METAL BASE
CWT	CERAMIC WALL TILE
CTB	CERAMIC BASE TILE
WD	WOOD VENEER AND SOLIDS
WP	MILLWORK ACCESSORIES & HARDWARE
ACT	ACOUSTICAL TILE CEILING
RP	RESIN PANEL
WIN COV	HORIZONTAL LOUVER BLINDS
CG	WALL PROTECTION
FP	FELT WALL & ACOUSTICAL PANELS

ARCHITECTURE PLANNING INTERIORS

LOHAN ANDERSON

BOARD OF LIBRARY TRUSTEES OF THE CITY OF DES PLAINES, OWNER
1501 ELLINWOOD ST., DES PLAINES, IL 60016

LOHAN ANDERSON, ARCH./INT.
401 N. MICHIGAN AVE., CHICAGO, IL 60611

CALOR DESIGN GROUP, LTD., MEP/FP
2217 N. WESTERN AVE., CHICAGO, IL 60647

C. S. ASSOCIATES, INC., STRUC.
4532 W. 103RD ST., OAK LAWN, IL 60453

REV.	DATE	ISSUE
	14 AUG '15	BID & PERMIT
	05 MAY '15	DESIGN DEVELOPMENT

DATE SIGNED:

Des Plaines Public Library Renovations

PROJECT NUMBER: 13300

FINISH LEGEND AND SPECIFICATION

A9-2.1

DOOR NUMBER/ ROOM NAME	OPENING SIZE W X H	DOOR TYPE	DOOR MATERIAL	DOOR FINISH	DOOR THICKNESS	FRAME MATERIAL	FRAME FINISH	JAMB DTL	HEAD DTL	SILL DTL	HARDWARE SET	RATING	OTHER REMARKS
101cA VESTIBULE	3'-0" X 7'-0"	2A	HM	PAINT	1 3/4"	HM	PAINT	J1	H1	S2	1	.75 HR (C)	REUSE DOOR, FRAME AND HARDWARE FROM OPENING 101cB
101cB VESTIBULE	-----	-----	-----	-----	-----	-----	-----	-----	-----	-----	-----	-----	OPENING DELETED; DISMANTLE DOOR, FRAME AND HARDWARE FOR REUSE AT OPENING 101cA
106aA PROJECTION ROOM	-----	-----	-----	-----	-----	-----	-----	-----	-----	-----	-----	-----	OPENING DELETED; DISMANTLE DOOR, FRAME & HARDWARE (REUSE IN OPENING 406bA FOR ADD ALTERNATE #7)
106A MEETING ROOM	3'-0" X 7'-0"	2C	WOOD	TRANSPARENT	1 3/4"	WOOD	TRANSPARENT	J4	H4	S5	1	-----	EXISTING DOOR, FRAME AND HARDWARE DISMANTLED AND RELOCATED
108aA BOOK RETURN RM	3'-0" X 7'-0"	1A	HM	PAINT	1 3/4"	HM	PAINT	J1	H1	S7	6	.75 HR (C)	REUSE DOOR AND HARDWARE; PROVIDE NEW FRAME TO MATCH EXISTING PROFILE PREPPED FOR NEW AUTO OPERATOR (SEE SK-1)
108jA OFFICE	3'-0" X 7'-0"	1A	WOOD	TRANSPARENT	1 3/4"	WOOD	TRANSPARENT	J1	H1	S5	6B	-----	JAMB DETAIL J1a AT GLASS LIGHT
108nA OFFICE	3'-0" X 7'-0"	2A	WOOD	TRANSPARENT	1 3/4"	WOOD	TRANSPARENT	J1	H1	S5	6A	-----	
108oA OFFICE	3'-0" X 7'-0"	1A	WOOD	TRANSPARENT	1 3/4"	WOOD	TRANSPARENT	J1	H1	S5	6A	-----	JAMB DETAIL J1a AT GLASS LIGHT
111B WORKROOM	-----	-----	-----	-----	-----	-----	-----	-----	-----	-----	-----	-----	OPENING DELETED; DISMANTLE DOOR AND HARDWARE FOR REUSE AT OPENING 117B
117B STORAGE ROOM	3'-0" X 7'-0"	1A	HM	PAINT	1 3/4"	HM	PAINT	J3a	H3a	S4	1	3 HR (A)	REUSE DOOR AND HARDWARE FROM OPENING 111B; PROVIDE NEW FRAME TO MATCH EXISTING OPENING 111B
303A STUDY ROOM	3'-0" X 8'-6"	1E	GLASS	-----	1/2"	GLASS	-----	SEE DETAILS ON SHEET A9-3.0			2	-----	DORMA SWING HARDWARE AND LADDER LOCKING PULL
303B STUDY ROOM	3'-0" X 8'-6"	1E	GLASS	-----	1/2"	GLASS	-----	SEE DETAILS ON SHEET A9-3.0			2	-----	DORMA SWING HARDWARE AND LADDER LOCKING PULL
304A STAFF OFFICE	EXISTING DOOR AND HARDWARE							J4	H4	S5	3	-----	REUSE DOOR AND HARDWARE; PROVIDE NEW FRAME TO MATCH EXISTING PROFILE PREPPED FOR NEW AUTO OPERATOR (SEE SK-2)
306aA OFFICE	EXISTING DOOR, FRAME AND HARDWARE							-----	-----	-----	-----	-----	DISMANTLE EXISTING DOOR, FRAME AND HARDWARE AND REINSTALL IN NEW LOCATION
403A INFORMATION TECH.	3'-0" X 7'-0"	2E	WOOD	TRANSPARENT	1 3/4"	WOOD	TRANSPARENT	J4,J5	H4	S5	4	-----	MODIFY EXISTING WOOD FRAME IN-PLACE FOR NEW ELECTRIC STRIKE AND DOOR POSITION SWITCH AND ROUT FRAME FOR WIRING; PATCH ANY HOLES AND/OR GROOVES TO MATCH EXISTING WOOD (SEE SK-3)
406bA CLOSET	3'-0" X 7'-0"	1A	HM	PAINT	1 3/4"	HM	PAINT	J1	H1	S2	1	-----	REUSE DOOR, FRAME AND HARDWARE FROM OPENING 106aA (ADD ALTERNATE #7)

ARCHITECTURE PLANNING INTERIORS

LOHAN ANDERSON

BOARD OF LIBRARY TRUSTEES OF THE CITY OF DES PLAINES, OWNER
1501 ELLINWOOD ST., DES PLAINES, IL 60016

LOHAN ANDERSON, ARCH./INT.
401 N. MICHIGAN AVE., CHICAGO, IL 60611

CALOR DESIGN GROUP, LTD., MEP/FP
2217 N. WESTERN AVE., CHICAGO, IL 60647

C. S. ASSOCIATES, INC., STRUC.
4532 W. 103RD ST., OAK LAWN, IL 60453

REV.	DATE	ISSUE
	14 AUG '15	BID & PERMIT
	05 MAY '15	DESIGN DEVELOPMENT

DATE SIGNED:

Des Plaines Public Library Renovations

PROJECT NUMBER: 13300

DOOR SCHEDULE

A9-3.0

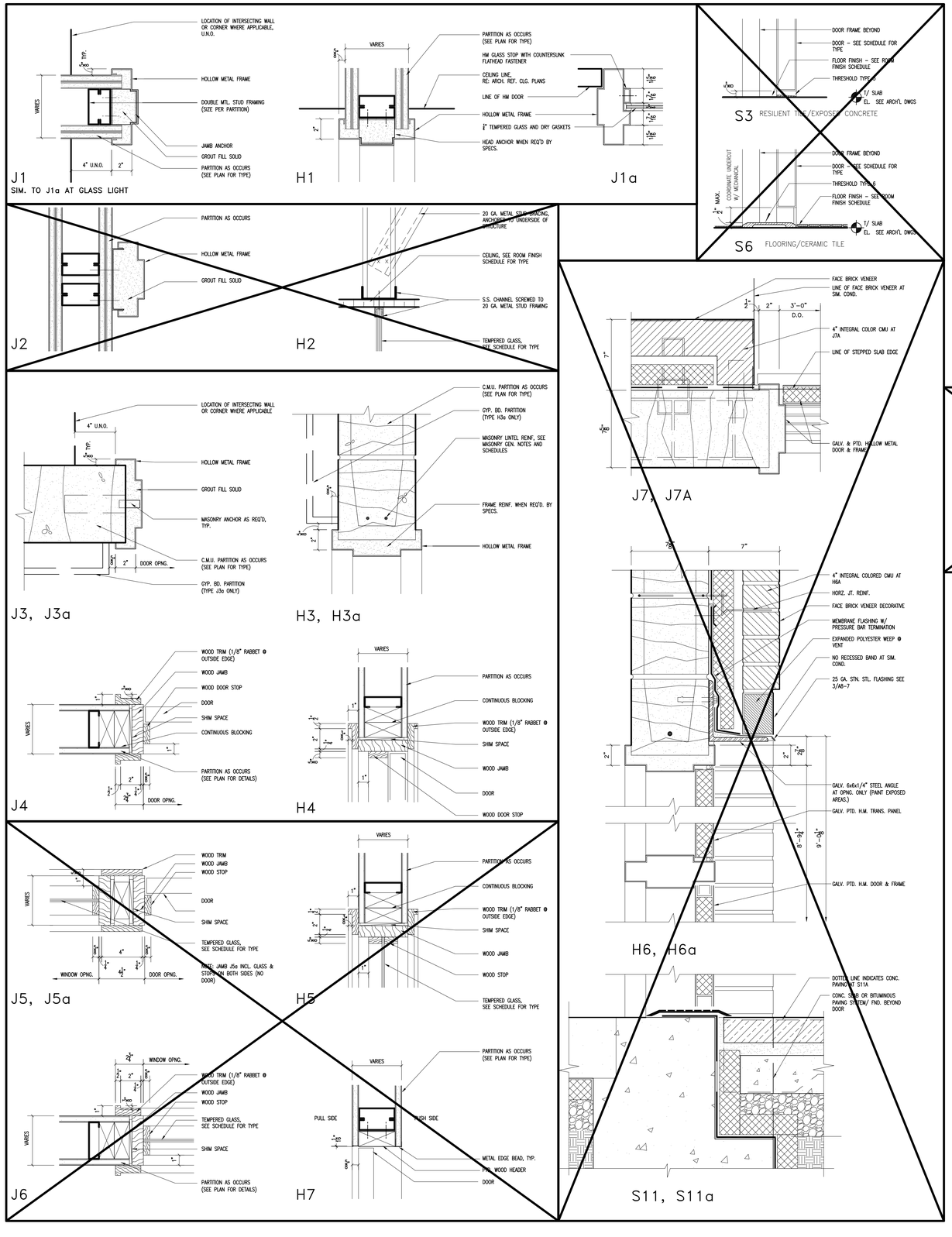

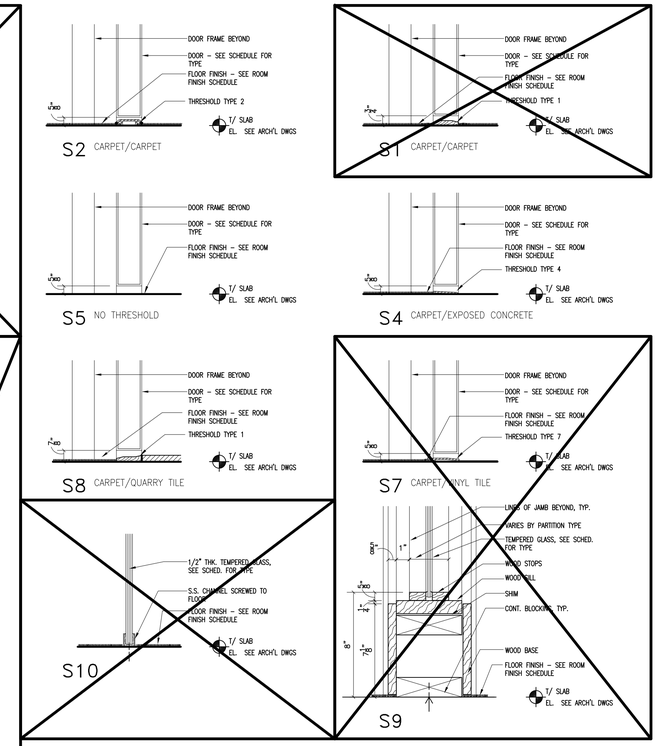

NOTE:
1. ALL WOOD DOORS RECEIVE VENEER TYPE WDV-1, UNLESS NOTED OTHERWISE.

2. CONTRACTOR TO PROVIDE ALL SECURITY HARDWARE AND CONNECTIONS TO EXISTING SECURITY SYSTEM AS REQUIRED. COORDINATE WITH EXISTING SECURITY SYSTEM

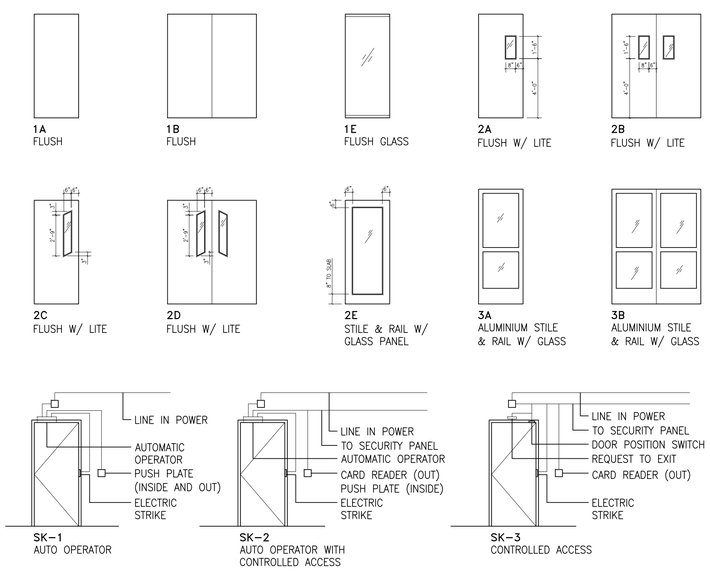

ARCHITECTURE PLANNING INTERIORS

LOHAN ANDERSON

BOARD OF LIBRARY TRUSTEES OF THE CITY OF DES PLAINES, OWNER
1501 ELLINWOOD ST., DES PLAINES, IL 60016

LOHAN ANDERSON, ARCH./INT.
401 N. MICHIGAN AVE., CHICAGO, IL 60611

CALOR DESIGN GROUP, LTD., MEP/FP
2217 N. WESTERN AVE., CHICAGO, IL 60647

C. S. ASSOCIATES, INC., STRUC.
4532 W. 103RD ST., OAK LAWN, IL 60453

REV.	DATE	ISSUE
	14 AUG '15	BID AND PERMIT
	05 MAY '15	DESIGN DEVELOPMENT

DATE SIGNED:

Des Plaines Public Library Renovations

PROJECT NUMBER: 13300

DOOR AND SILL DETAILS AND DOOR TYPES

A9-3.1

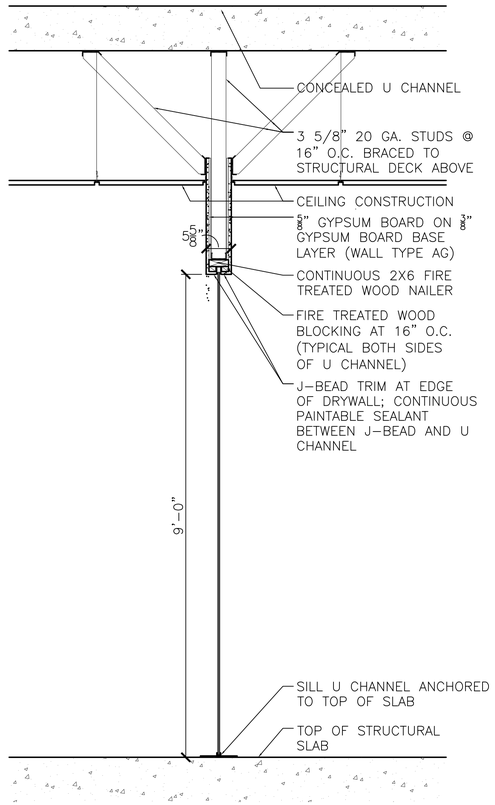

3 SECTION @ 4TH FLOOR GLASS WALL (RM. 401e)
SCALE: 3/4" = 1'-0"

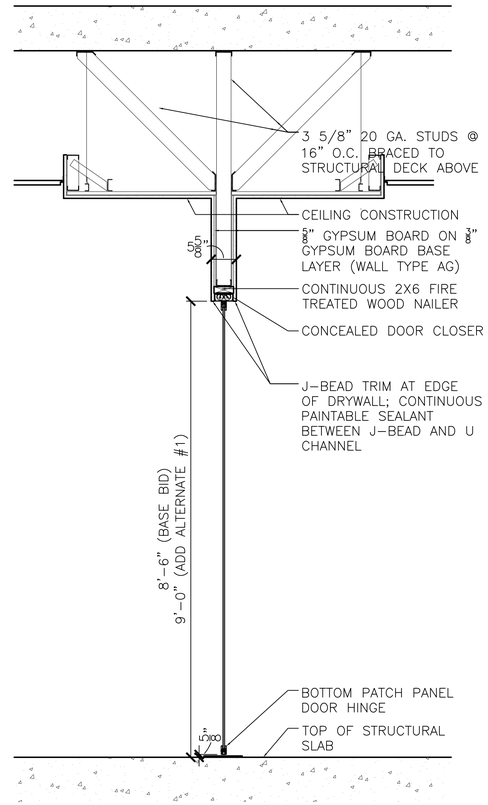

2 SECTION @ 3RD FLOOR GLASS WALL SWING DOOR (RM. 303)
SCALE: 3/4" = 1'-0"

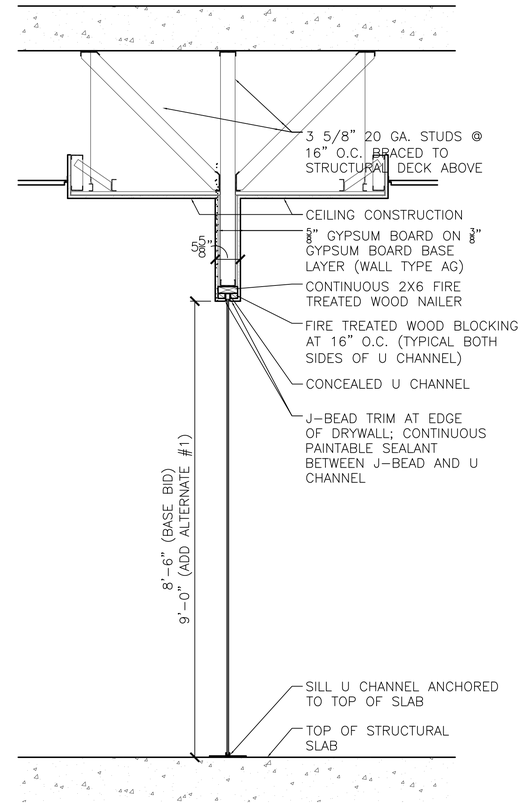

1 SECTION @ 3RD FLOOR GLASS WALL (RM. 303)
SCALE: 3/4" = 1'-0"

ARCHITECTURE PLANNING INTERIORS
LOHAN ANDERSON

BOARD OF LIBRARY TRUSTEES OF THE CITY OF DES PLAINES, OWNER
1501 ELLINWOOD ST., DES PLAINES, IL 60016

LOHAN ANDERSON, ARCH./INT.
401 N. MICHIGAN AVE., CHICAGO, IL 60611

CALOR DESIGN GROUP, LTD., MEP/FP
2217 N. WESTERN AVE., CHICAGO, IL 60647

C. S. ASSOCIATES, INC., STRUC.
4532 W. 103RD ST., OAK LAWN, IL 60453

REV.	DATE	ISSUE
	14 AUG '15	BID AND PERMIT
	05 MAY '15	DESIGN DEVELOPMENT

DATE SIGNED:

Des Plaines Public Library Renovations

PROJECT NUMBER: 13300

GLASS WALL DETAILS

A9-3.2

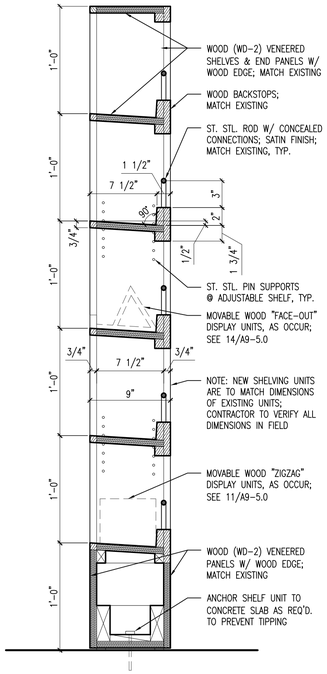

10 DETAIL @ NEW DISPLAY SHELVING UNIT
SCALE: 1-1/2" = 1'-0"

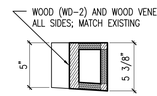

12 DETAIL
SCALE: 1-1/2" = 1'-0"

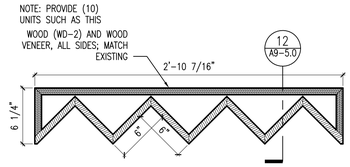

11 DETAIL @ NEW DISPLAY SHELVING UNIT
SCALE: 1-1/2" = 1'-0"

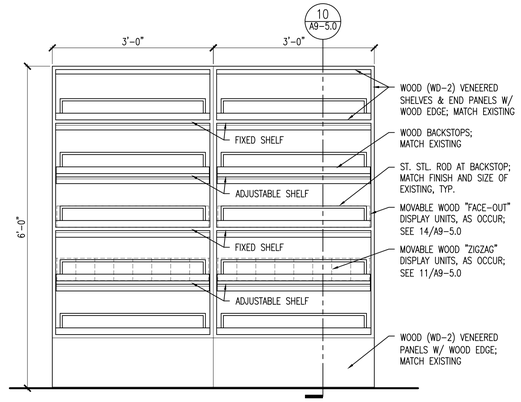

9 ELEV @ NEW DISPLAY SHELVING UNIT
SCALE: 3/4" = 1'-0"

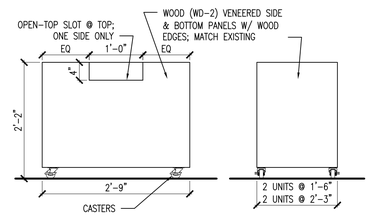

13 ELEVS @ NEW STORAGE BINS
SCALE: 3/4" = 1'-0"

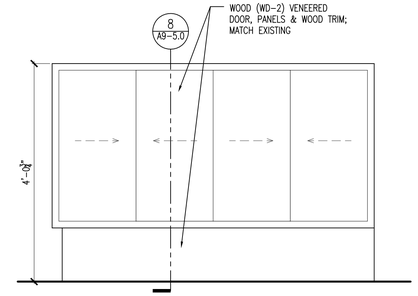

5 ELEV @ NEW STORAGE UNIT BEHIND DESK
SCALE: 3/4" = 1'-0"

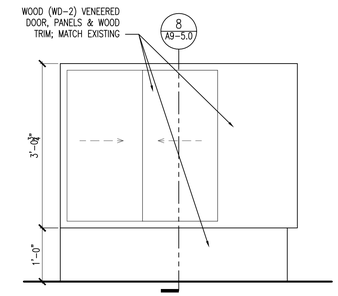

6 ELEV @ NEW STORAGE UNIT BEHIND DESK
SCALE: 3/4" = 1'-0"

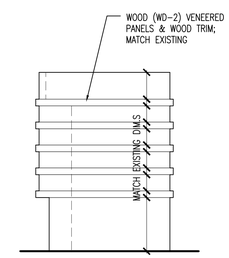

4 ELEV @ NEW SECURITY PODIUM
SCALE: 3/4" = 1'-0"

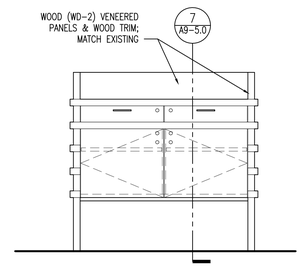

3A ELEV @ NEW SECURITY PODIUM
SCALE: 3/4" = 1'-0"

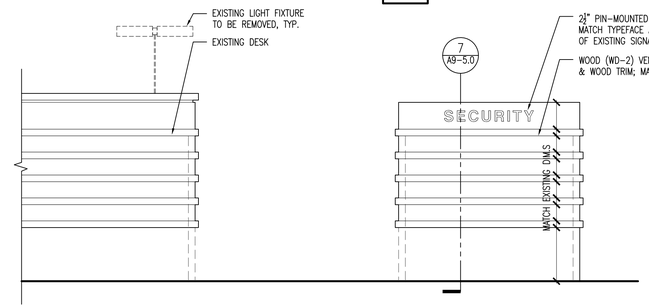

3 ELEV @ EXISTING INFORMATION DESK & NEW SECURITY PODIUM
SCALE: 3/4" = 1'-0"

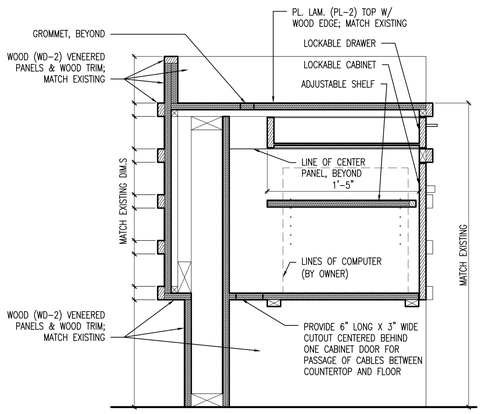

7 DETAIL @ NEW SECURITY PODIUM
SCALE: 1-1/2" = 1'-0"

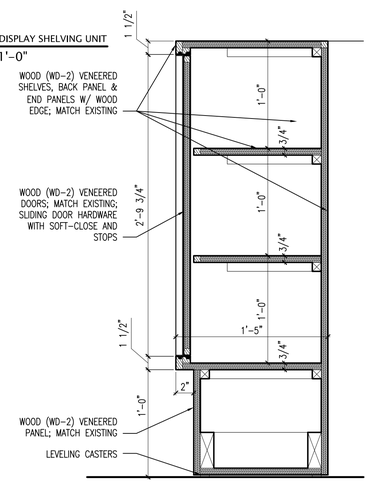

8 DETAIL @ NEW STORAGE UNIT BEHIND DESK
SCALE: 1-1/2" = 1'-0"

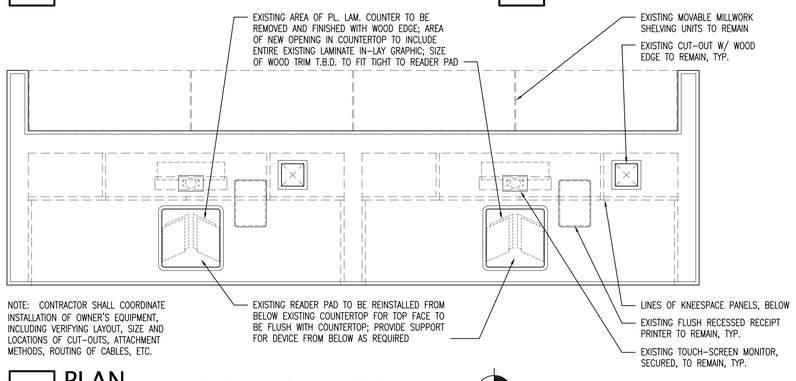

2 PLAN @ EXISTING SELF-CHECKOUT COUNTER (TYP. OF 2)
SCALE: 3/4" = 1'-0"

N

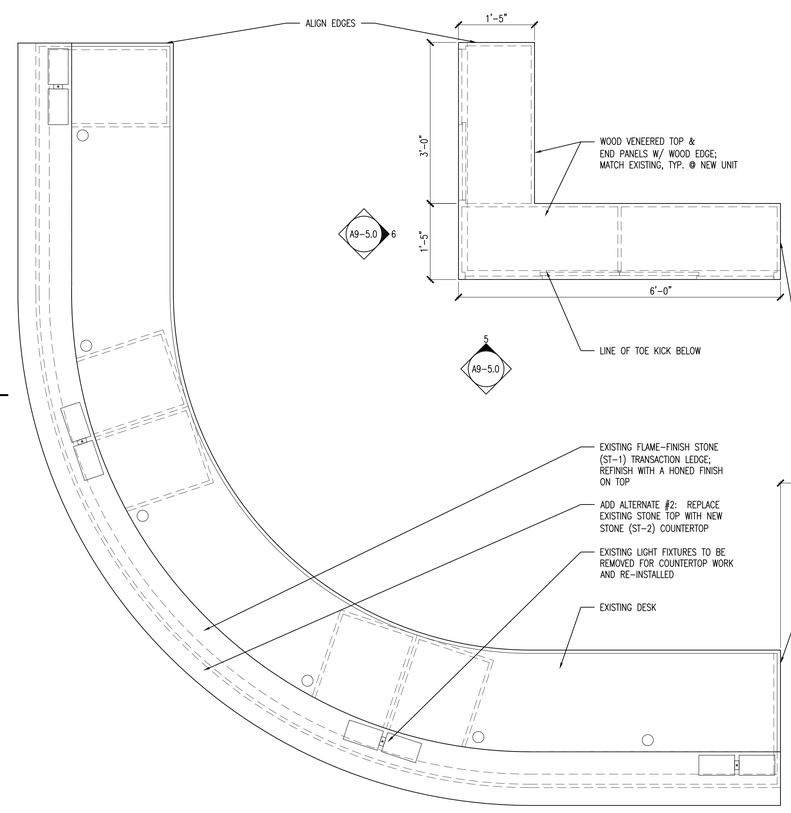

1 PLAN @ EXISTING DESK, NEW STORAGE UNIT & NEW SECURITY PODIUM
SCALE: 3/4" = 1'-0"

N

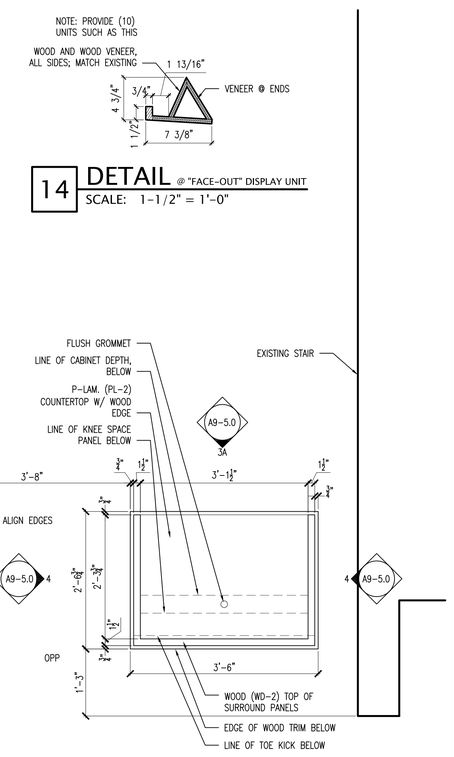

14 DETAIL @ "FACE-OUT" DISPLAY UNIT
SCALE: 1-1/2" = 1'-0"

3
A9-5.0

ARCHITECTURE PLANNING INTERIORS
LOHAN ANDERSON

BOARD OF LIBRARY TRUSTEES OF THE CITY OF DES PLAINES, OWNER
1501 ELLINWOOD ST., DES PLAINES, IL 60016

LOHAN ANDERSON, ARCH./INT.
401 N. MICHIGAN AVE., CHICAGO, IL 60611

CALOR DESIGN GROUP, LTD., MEP/FP
2217 N. WESTERN AVE., CHICAGO, IL 60647

C. S. ASSOCIATES, INC., STRUC.
4532 W. 103RD ST., OAK LAWN, IL 60453

REV.	DATE	ISSUE
	14 AUG '15	BID AND PERMIT
	05 MAY '15	DESIGN DEVELOPMENT

DATE SIGNED:

Des Plaines Public Library Renovations

PROJECT NUMBER: 13300

1ST FLOOR INTERIOR DETAILS

A9-5.0

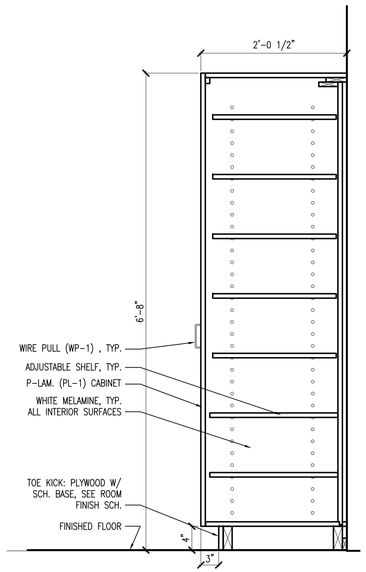

5 SECTION @ MILLWORK TALL CABINET
SCALE: 1" = 1'-0"

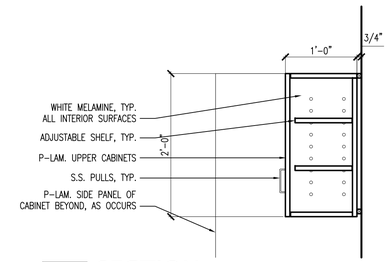

10 SECTION @ MILLWORK WALL CABINET
SCALE: 1" = 1'-0"

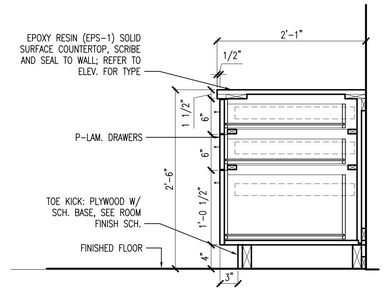

11 SECTION @ MILLWORK BASE CABINET
SCALE: 1" = 1'-0"

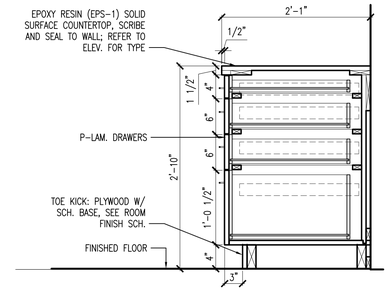

12 SECTION @ MILLWORK BASE CABINET
SCALE: 1" = 1'-0"

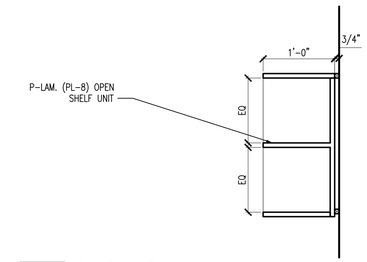

13 SECTION @ MILLWORK WALL SHELVING
SCALE: 1" = 1'-0"

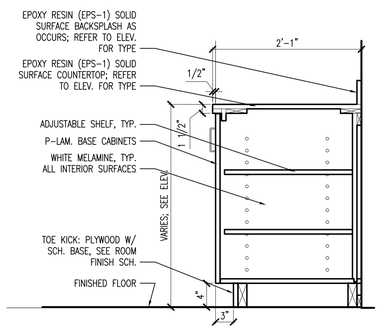

6 SECTION @ MILLWORK BASE CABINET
SCALE: 1" = 1'-0"

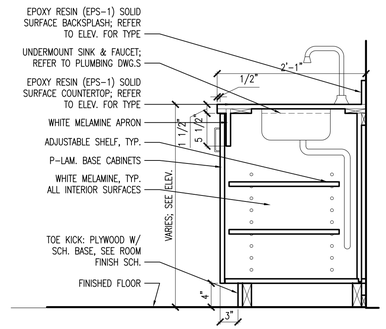

7 SECTION @ MILLWORK SINK CABINET
SCALE: 1" = 1'-0"

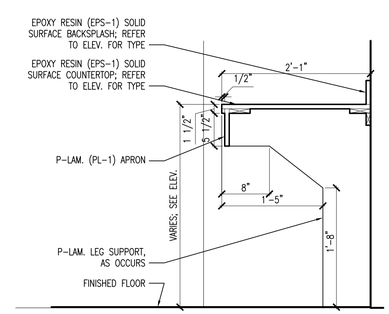

8 SECTION @ MILLWORK COUNTER
SCALE: 1" = 1'-0"

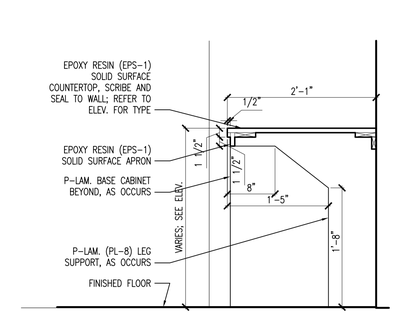

9 SECTION @ MILLWORK COUNTER
SCALE: 1" = 1'-0"

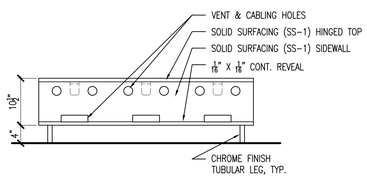

3 ELEV @ NEW GAME CONSOLE CABINET
SCALE: 3/4" = 1'-0"

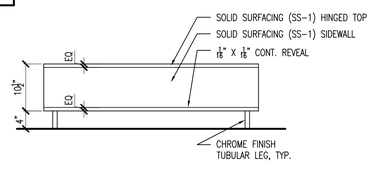

2 ELEV @ NEW GAME CONSOLE CABINET
SCALE: 3/4" = 1'-0"

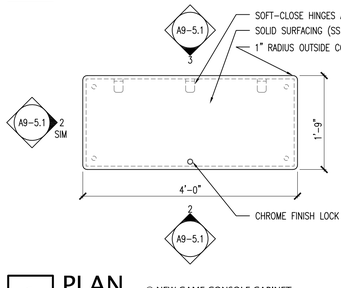

1 PLAN @ NEW GAME CONSOLE CABINET
SCALE: 3/4" = 1'-0"

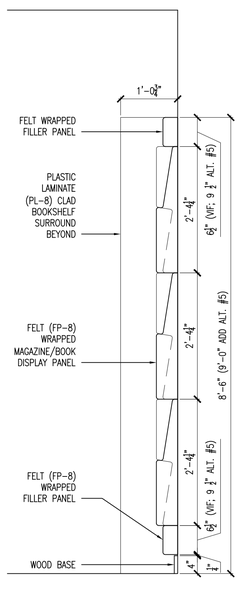

14 SECTION @ FELT WRAPPED PANELS
SCALE: 3/4" = 1'-0"

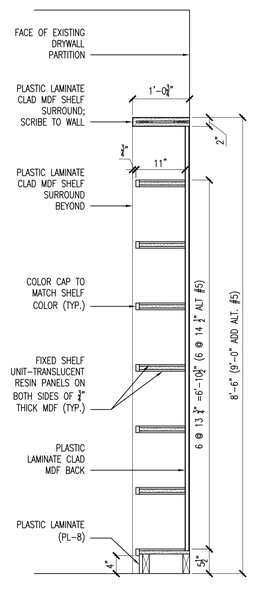

15 SECTION @ RESIN BOOKSHELVES
SCALE: 3/4" = 1'-0"

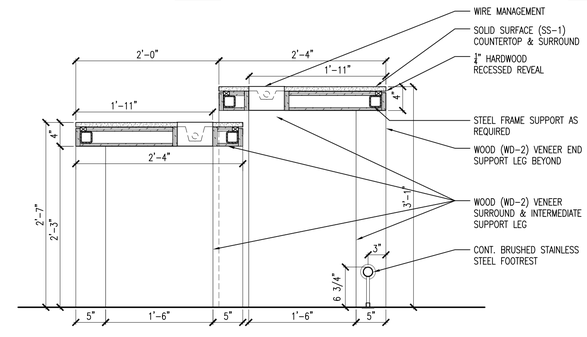

4 SECTION @ NEW EBAR TABLES
SCALE: 3/4" = 1'-0"

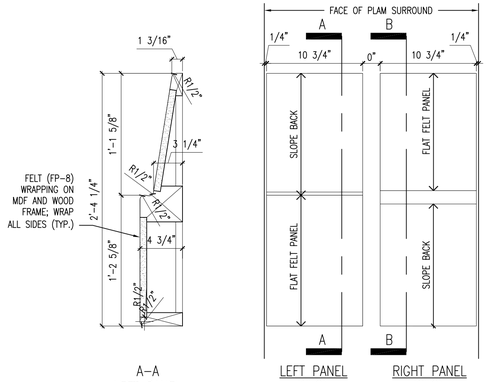

A–A
LEFT PANEL
PIECE SECTION

LEFT PANEL
PIECE
ELEVATION

RIGHT PANEL
PIECE
ELEVATION

NOTE:
PANELS MAY BE MADE IN ONE OR TWO PIECES. A FULL PANEL CONSISTS OF ONE LEFT AND ONE RIGHT PANEL PIECE ABUTTED WHEN HUNG ON THE WALL

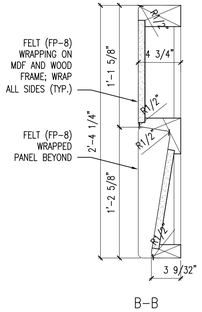

B–B
RIGHT PANEL
PIECE SECTION

16 DETAILS @ FELT WRAPPED PANELS
SCALE: 1-1/2" = 1'-0"

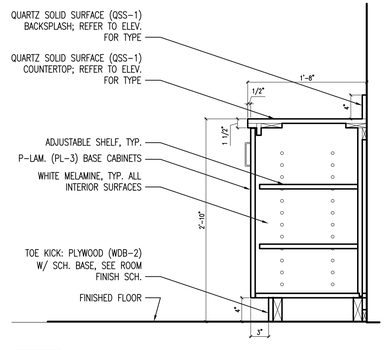

18 SECTION @ ROOM 106a
SCALE: 1" = 1'-0"

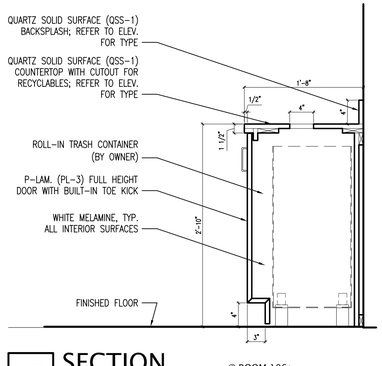

17 SECTION @ ROOM 106a
SCALE: 1" = 1'-0"

ARCHITECTURE PLANNING INTERIORS
LOHAN ANDERSON

BOARD OF LIBRARY TRUSTEES OF THE CITY OF DES PLAINES, OWNER
1501 ELLINWOOD ST., DES PLAINES, IL 60016

LOHAN ANDERSON, ARCH./INT.
401 N. MICHIGAN AVE., CHICAGO, IL 60611

CALOR DESIGN GROUP, LTD., MEP/FP
2217 N. WESTERN AVE., CHICAGO, IL 60647

C. S. ASSOCIATES, INC., STRUC.
4532 W. 103RD ST., OAK LAWN, IL 60453

REV.	DATE	ISSUE
	14 AUG '15	BID AND PERMIT

DATE SIGNED:

Des Plaines Public Library Renovations

PROJECT NUMBER: 13300

INTERIOR DETAILS

A9-5.1

ARCHITECTURE PLANNING INTERIORS

LOHAN ANDERSON

BOARD OF LIBRARY TRUSTEES OF THE CITY OF DES PLAINES, OWNER
1501 ELLINWOOD ST., DES PLAINES, IL 60016

LOHAN ANDERSON, ARCH./INT.
401 N. MICHIGAN AVE., CHICAGO, IL 60611

CALOR DESIGN GROUP, LTD., MEP/FP
2217 N. WESTERN AVE., CHICAGO, IL 60647

C. S. ASSOCIATES, INC., STRUC.
4532 W. 103RD ST., OAK LAWN, IL 60453

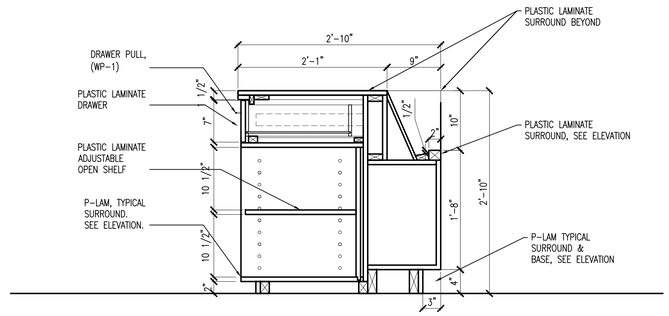

4 SECTION @ 2ND FLOOR INFORMATION DESK
SCALE: 1" = 1'-0"

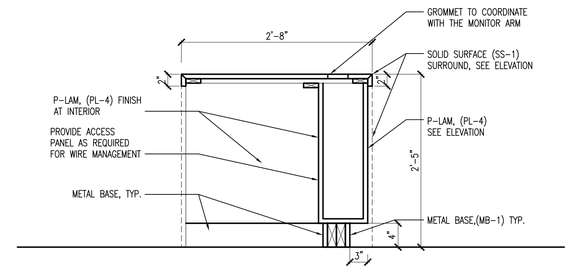

3 SECTION @ 2ND FLOOR INFORMATION DESK
SCALE: 1" = 1'-0"

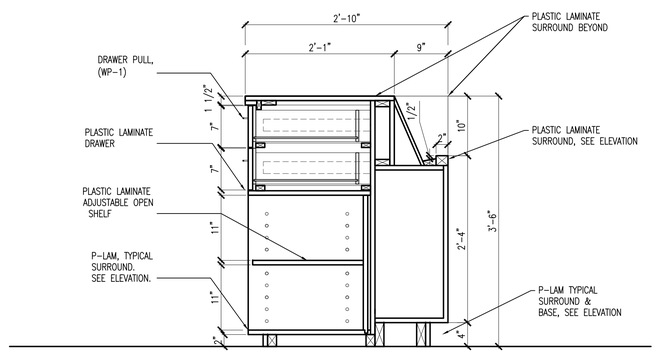

5 SECTION @ 3RD & 4TH FLR INFO DESK - NORTH UNIT
SCALE: 1" = 1'-0"

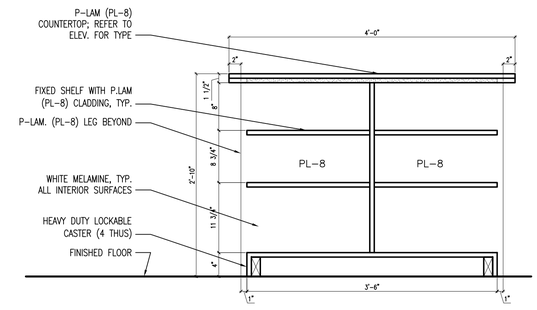

2 SECTION @ ROOM 304 CENTER WORK COUNTER
SCALE: 1" = 1'-0"

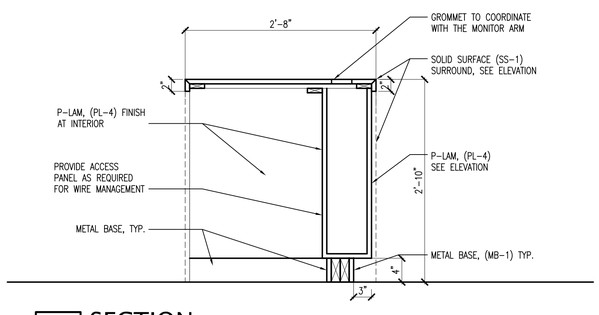

7 SECTION @ 3RD & 4TH FLOOR INFO DESK
SCALE: 1" = 1'-0"

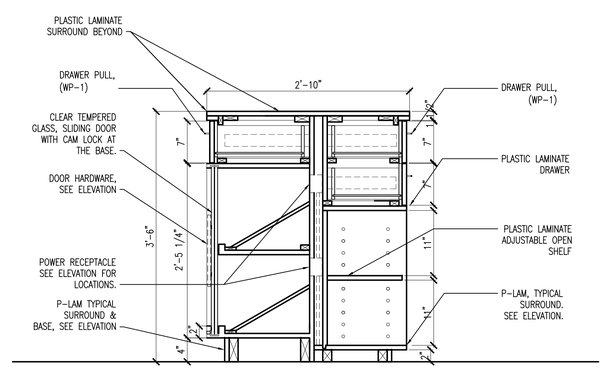

6 SECTION @ 3RD FLOOR - SOUTH UNIT
SCALE: 1" = 1'-0"

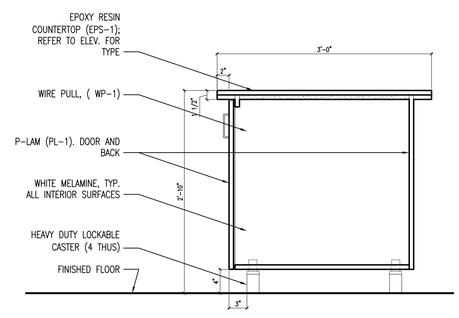

1 SECTION @ ROOM 304 EAST WORK COUNTER
SCALE: 1" = 1'-0"

REV.	DATE	ISSUE
	14 AUG '15	BID AND PERMIT

DATE SIGNED:

Des Plaines Public Library Renovations

PROJECT NUMBER: 13300

INTERIOR DETAILS

A9-5.2

Des Plaines Public Library

DRAWING LABEL	MANUFACTURER	PRODUCT	REMARKS
Chairs			
CH-1	Herman Miller	Task Chair - upholstered	**ADD ALTERNATE** : Admin Conference 218
CH-2	Herman Miller	Lounge Chair - with Arms	**Location:** Alcove 203f
CH-3	Bernhardt	Gaming Lounge Chair - upholstered	**Location:** The Commons
CH-4	Herman Miller Collection	Side Chairs -upholstered	**Location** : The Commons
CH-5	Herman Miller	Lounge Chair - upholstered	**Location**:Commons & Adult Collections 401g
CH-6	Herman Miller Collection	Task Chair	**Location** : Study Room 301e, The Commons Librarian Workstation
CH-7	Herman Miller Collection	Upholstered Side Chairs	**Location** : Ebar - Adult Collections
CH-8a	Herman Miller	Chair with casters - arms	**Location** : Forum
CH-8b	Herman Miller	Chair with casters - armless	**Location** : Forum
CH-9	Herman Miller	Lounge Chair - plywood frame	**Location:** Adult Collections Area 401, Lounge Area 401g
Stools			
ST-1	Herman Miller Collection	Stool counter height	**Location:** Creative Services
ST-2	Herman Miller Collection	Stool -counter height - fiberglass seat	**Location:** The Commons, Craft table
ST-3	Herman Miller Collection	Stool counter height - fiberglass upholstered	**Location** : Ebar - Adult Collections
ST-4	Herman Miller	Adjustable Height Task chair/stool	**Location** : Forum
Workstations			
WRK-1A TO 1D	Herman Miller	WORKSTATION	**Location:** Tech Services RM 111. Open office system: See Specifications
WRK-2A TO 2B	Herman Miller	WORKSTATION	**Location:** Tech Services RM 111. Open office system: See Specifications
WRK-3A TO 3F	Herman Miller	WORKSTATION	**Location:** Circulation Workroom 108. Open office system: See Specifications
WRK-4	Herman Miller	Benching System	**Location** : Circulation Workroom 108 Benching System: See Specifications
WRK-5	Existing/Reuse	Individual Workstation (Sit to Stand)	**Location:** Circulation Workroom 108
WRK-6	Library Furniture International	Information Desk 2nd Floor	**Location** : 2nd Floor
WRK-7	Herman Miller	Sit to Stand Desk with privacy screen/moveable Fixed Credenza	**Location:** Youth Computer Area 201d
WRK-8	Herman Miller	Librarian Workstation @ The Commons	**Location** : The Commons
WRK-9	Library Furniture International	Information Desk 3rd Floor	**Location** : 3rd Floor
WRK-10a	Library Furniture International	CustomLow nested worktable - desk ht	**Location** : Ebar - Adult Collections
WRK-10b	Library Furniture International	Custom High nested worktable - counter ht	**Location** : Ebar - Adult Collections
WRK-11	Library Furniture International	Information Desk 4th Floor	**Location** : 4th Floor
WRK-12	Herman Miller	Workstations	**Location** : Info Tech Dept 403
WRK-13	Herman Miller	Individual workstation Sit/Stand	**Location:** 4th Floor Open Area 401f
WRK-14A TO 14B	Herman Miller	WORKSTATION	**Location:** Creative Services Rm 304 . Open office system: See Specifications
WRK-15A TO 15F	Herman Miller	WORKSTATION	**Location:** Adult Services Rm 306 . Open office system: See Specifications
WRK-16A TO 16B	Herman Miller	WORKSTATION	**Location:** Adult Services Rm 306 . Open office system: See Specifications
WRK-17	Herman Miller	WORKSTATION	**Location:** Adult Services Rm 306 . Open office system: See Specifications
Tables			
TB-1	Herman Miller	Work table - Counter height /adjustable	**Location** : Circulation Workroom 108 See Specifications
TB-2	Geiger	Conference Training Table - Mobile/Stacking	**Location:** Administrative Conference Room 218
TB-3	3 Branch	Shape Computer table - 28" h /Mobile with power tower and acrylic shroud	**Location:** Youth Computer Area 201d
TB-4	3 Branch	Table - Youth height 26"H/power/data access at desktop	**Location:** Youth Computer Area 201d
TB-5	3 Branch	Table - Youth height 26"H/power/data access at desktop	**Location:** Youth Computer Area 201d
TB-6	Martin Brattrud	Lounge table	**Location** : The Commons
TB-7	Herman Miller	Mobile table	**Location** : The Commons
TB-8	Martin Brattrud	Round tablet table	**Location** : The Commons
TB-9	Nienkamper	Powered top/stool	**Location** : The Commons
TB-10	Geiger	Conference Table - Mobile/Stacking	**Location** : Study Room 301e
TB-11a	3 Branch	Mobile -Shape table - 29" h	**Location** : Forum
TB-11b	Nienkamper	Adjustable Height Table	**Location** : Forum
TB-12	Herman Miller	Universal Table	**Location:** Conference 108n
TB-13	Martin Brattrud	Rectangular Tablet Table	**Location:** Alcove 203f
Private Office			
PO-1	Herman Miller	Private Office desk system	**Location:** Tech Services Office 108j
PO-2	Existing / Reuse	Relocation furniture system	**Location:** Circulation Workrm Office 108o. Refer to Furniture Dealer's Drawings
PO-3	Existing / Reuse	Relocation furniture system	**Location:** Adult services Office 306a. Refer to Furniture Dealer's Drawings
Sofas, Benches, & Ottomans			
B-1	Berhardt Design	Mirador	**Location** : The Commons
B-2	Berhardt Design	Mirador	**Location** : Adult Collection Area 401
B-3	Berhardt Design	Mirador	**Location** : Adult Collection Area 301
OT-1	TMC	Splash Puddle stool	**Location** : Post Tree Area
OT-2	TMC	Little Puddle stool	**Location** : Post Tree Area
OT-3	TMC	Big Puddle stool	**Location** : Post Tree Area
OT-4	Nienkamper	Small ottoman/Stool	**Location** : The Commons
OT-5	Nienkamper	Small ottoman/Stool	**Location** : E-Bar Adult Collection Area 301
Miscellaneous Filing, Storage, Display or Shelving			
LF-1	Herman Miller	Lateral file cabinets	**Location:** Adult Services 306
SC-1	Herman Miller	Counter height - storage cabinets with worktop surround	**Location:** Circulation Workroom
SH-1	Library Furniture International	Low height/curved shelving unit end	**Location** : Post Tree Area
SH-2	Library Furniture International	Low height/curved shelving unit	**Location** : Post Tree Area
SH-3	Library Furniture International	Display shelving - Match Existing	**Location** : Post Tree Area
SH-4	Library Furniture International	Display shelving - Match Existing	**Location** : Post Tree Area
PP-1	Steelcase	Power pod	**Location** : Forum
PP-2	Library Furniture International	Power Tower	**Location:** Youth Computer Area 201d
MC-1	Bretford	Mobile charging cart	**Location** : Work Center Supply Rm 406b

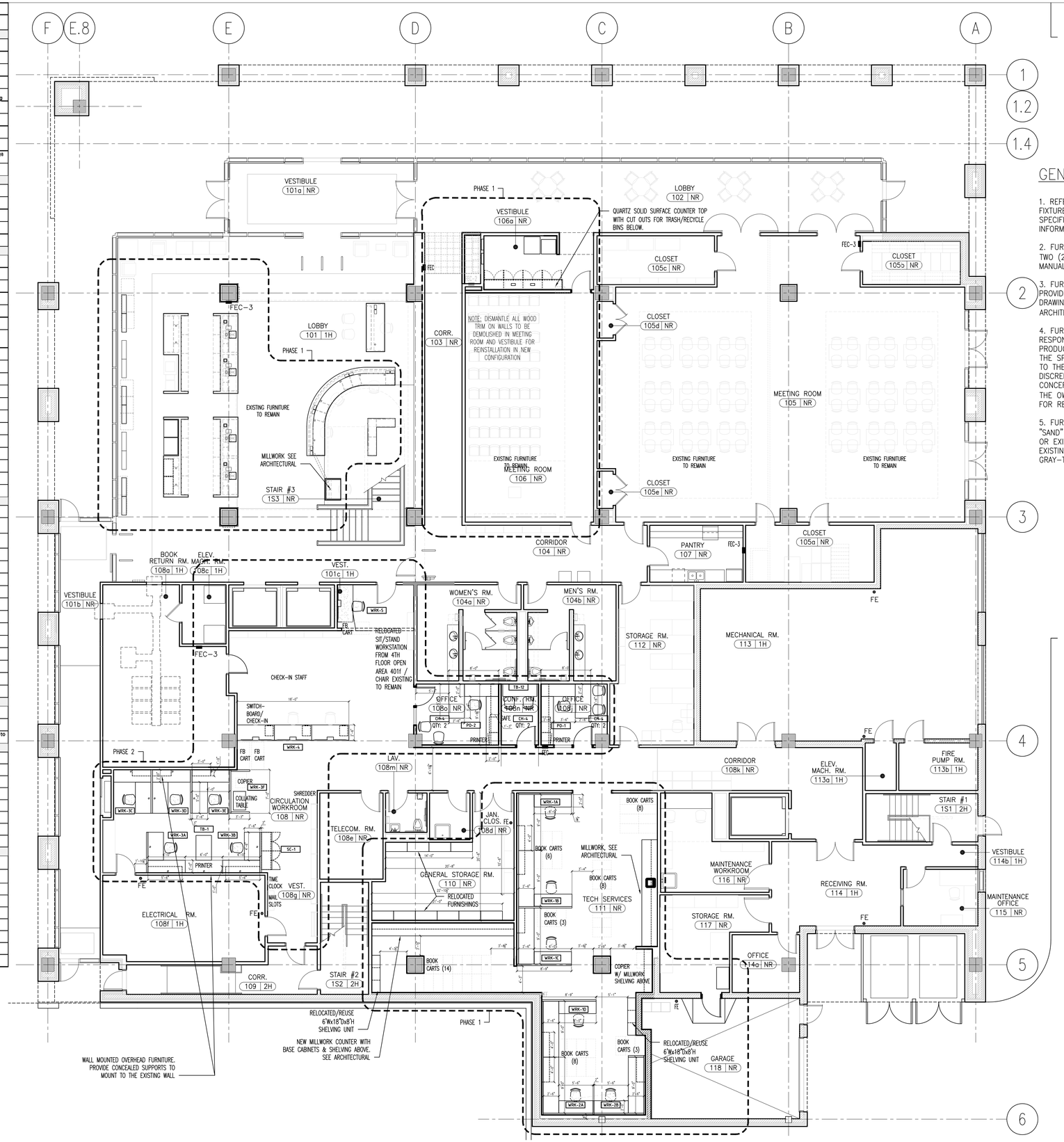

1 FIRST FLOOR FURNITURE PLAN
SCALE: 1/8" = 1'-0"

ARCHITECTURE PLANNING INTERIORS
LOHAN ANDERSON

BOARD OF LIBRARY TRUSTEES OF THE CITY OF DES PLAINES, OWNER
1501 ELLINWOOD ST., DES PLAINES, IL 60016

LOHAN ANDERSON, ARCH./INT.
401 N. MICHIGAN AVE., CHICAGO, IL 60611

CALOR DESIGN GROUP, LTD., MEP/FP
2217 N. WESTERN AVE., CHICAGO, IL 60647

C. S. ASSOCIATES, INC., STRUC.
4532 W. 103RD ST., OAK LAWN, IL 60453

GENERAL NOTES

1. REFER TO THE FURNITURE, FIXTURE AND EQUIPMENT SPECIFICATION GUIDE FOR PRODUCT INFORMATION.

2. FURNITURE WILL BE DELIVERED IN TWO (2) PHASES. SEE THE PROJECT MANUAL FOR REQUIREMENTS.

3. FURNITURE CONTRACTOR TO PROVIDE INSTALLATION SHOP DRAWINGS & FINISH SUBMITTALS FOR ARCHITECT'S REVIEW.

4. FURNITURE CONTRACTOR WILL BE RESPONSIBLE FOR CONFIRMING PRODUCT SIZES AND COMPONENTS IN THE SPECIFICATIONS AS THEY RELATE TO THE PLAN LAYOUT. ANY DISCREPANCIES OR LAYOUT CONCERNS SHOULD BE BROUGHT TO THE OWNER'S ATTENTION IMMEDIATELY FOR REVIEW.

5. FURNITURE INDICATED WITH A "SAND" HATCH PATTERN AS EXISTING OR EXISTING TO BE RELOCATED. EXISTING FURNITURE TO REMAIN ARE GRAY-TONE.

N

REV.	DATE	ISSUE
	14 AUG '15	BID AND PERMIT
	03 AUG '15	FFE/FINISH FINAL REVIEW MTG
	02 JUL '15	FFE/FINISH REVIEW MEETING
	05 MAY '15	DESIGN DEVELOPMENT
	06 MAR '15	SCHEMATIC DESIGN

DATE SIGNED:

Des Plaines Public Library Renovations

PROJECT NUMBER: 13300

1ST FLOOR FURNITURE PLAN

I2.11

Des Plaines Public Library

DRAWING LABEL	MANUFACTURER	PRODUCT	REMARKS
Chairs			
CH-1	Herman Miller	Task Chair - upholstered	**ADD ALTERNATE :** Admin Conference 218
CH-2	Herman Miller	Lounge Chair - with Arms	**Location:** Alcove 203f
CH-3	Bernhardt	Gaming Lounge Chair - upholstered	**Location:** The Commons
CH-4	Herman Miller Collection	Side Chairs -upholstered	**Location :** The Commons
CH-5	Herman Miller	Lounge Chair - upholstered	**Location :** Commons & Adult Collections 401g
CH-6	Herman Miller Collection	Task Chair	**Location :** Study Room 301a, The Commons Librarian Workstation
CH-7	Herman Miller Collection	Upholstered Side Chairs	**Location :** Ebar - Adult Collections
CH-8a	Herman Miller	Chair with casters - arms	**Location :** Forum
CH-8b	Herman Miller	Chair with casters - armless	**Location :** Forum
CH-9	Herman Miller	Lounge Chair - plywood frame	**Location:** Adult Collections Area 401, Lounge Area 401g
Stools			
ST-1	Herman Miller Collection	Stool counter height	**Location:** Creative Services
ST-2	Herman Miller Collection	Stool -counter height - fiberglass seat	**Location:** The Commons, Craft table
ST-3	Herman Miller Collection	Stool counter height - fiberglass upholstered	**Location :** Ebar - Adult Collections
ST-4	Herman Miller	Adjustable Height Task chair/stool	**Location :** Forum
Workstations			
WRK-1A TO 1D	Herman Miller	WORKSTATION	**Location:** Tech Services RM 111. Open office system: See Specifications
WRK-2A TO 2B	Herman Miller	WORKSTATION	**Location:** Tech Services RM 111. Open office system: See Specifications
WRK-3A TO 3F	Herman Miller	WORKSTATION	**Location:** Circulation Workroom 108. Open office system: See Specifications
WRK-4	Herman Miller	Benching System	**Location :** Circulation Workroom 108 Benching System: See Specifications
WRK-5	Existing/Reuse	Individual Workstation (Sit to Stand)	**Location:** Circulation Workroom 108
WRK-6	Library Furniture International	Information Desk 2nd Floor	**Location :** 2nd Floor
WRK-7	Herman Miller	Sit to Stand Desk with privacy screen/moveable Fixed Credenza	**Location:** Youth Computer Area 201d
WRK-8	Herman Miller	Librarian Workstation @ The Commons	**Location :** The Commons
WRK-9	Library Furniture International	Information Desk 3rd Floor	**Location :** 3rd Floor
WRK-10a	Library Furniture International	CustomLow nested worktable - desk ht	**Location :** Ebar - Adult Collections
WRK-10b	Library Furniture International	Custom High nested worktable - counter ht	**Location :** Ebar - Adult Collections
WRK-11	Library Furniture International	Information Desk 4th Floor	**Location :** 4th Floor
WRK-12	Herman Miller	Workstations	**Location :** Info Tech Dept 403
WRK-13	Herman Miller	Individual workstation Sit/Stand	**Location:** 4th Floor Open Area 401f
WRK-14A TO 14B	Herman Miller	WORKSTATION	**Location:** Creative Services Rm 304 . Open office system: See Specifications
WRK-15A TO 15F	Herman Miller	WORKSTATION	**Location:** Adult Services Rm 306 . Open office system: See Specifications
WRK-16A TO 16B	Herman Miller	WORKSTATION	**Location:** Adult Services Rm 306 . Open office system: See Specifications
WRK-17	Herman Miller	WORKSTATION	**Location:** Adult Services Rm 306 . Open office system: See Specifications
Tables			
TB-1	Herman Miller	Work table - Counter height /adjustable	**Location :** Circulation Workroom 108 See Specifications
TB-2	Geiger	Conference Training Table - Mobile/Stacking	**Location:** Administrative Conference Room 218
TB-3	3 Branch	Shape Computer table - 26" h /Mobile with power tower and acrylic shroud	**Location:** Youth Computer Area 201d
TB-4	3 Branch	Table - Youth height 26"H/power/data access at desktop	**Location:** Youth Computer Area 201d
TB-5	3 Branch	Table - Youth height 26"H/power/data access at desktop	**Location:** Youth Computer Area 201d
TB-6	Martin Brattrud	Lounge table	**Location :** The Commons
TB-7	Herman Miller	Mobile table	**Location :** The Commons
TB-8	Martin Brattrud	Round tablet table	**Location :** The Commons
TB-9	Nienkamper	Powered top/stool	**Location :** The Commons
TB-10	Geiger	Conference Table - Mobile/Stacking	**Location :** Study Room 301a
TB-11a	3 Branch	Mobile -Shape table - 29" h	**Location :** Forum
TB-11b	Nienkamper	Adjustable Height Table	**Location :** Forum
TB-12	Herman Miller	Universal Table	**Location:** Conference 108n
TB-13	Martin Brattrud	Rectangular Tablet Table	**Location:** Alcove 203f
Private Office			
PO-1	Herman Miller	Private Office desk system	**Location:** Tech Services Office 108j
PO-2	Existing / Reuse	Relocation furniture system	**Location:** Circulation Workrm Office 108o. Refer to Furniture Dealer's Drawings
PO-3	Existing / Reuse	Relocation furniture system	**Location:** Adult services Office 306a. Refer to Furniture Dealer's Drawings
Sofas, Benches, & Ottomans			
B-1	Berhardt Design	Mirador	**Location :** The Commons
B-2	Berhardt Design	Mirador	**Location :** Adult Collection Area 401
B-3	Berhardt Design	Mirador	**Location :** Adult Collection Area 301
OT-1	TMC	Splash Puddle stool	**Location :** Poet Tree Area
OT-2	TMC	Little Puddle stool	**Location :** Poet Tree Area
OT-3	TMC	Big Puddle stool	**Location :** Poet Tree Area
OT-4	Nienkamper	Small ottoman/Stool	**Location :** The Commons
OT-5	Nienkamper	Small ottoman/Stool	**Location :** E-Bar Adult Collection Area 301
Miscellaneous Filing, Storage, Display or Shelving			
LF-1	Herman Miller	Lateral file cabinets	**Location:** Adult Services 306
SC-1	Herman Miller	Counter height - storage cabinets with worktop surround	**Location:** Circulation Workroom
SH-1	Library Furniture International	Low height/curved shelving unit end	**Location :** Poet Tree Area
SH-2	Library Furniture International	Low height/curved shelving unit	**Location :** Poet Tree Area
SH-3	Library Furniture International	Display shelving - Match Existing	**Location :** Poet Tree Area
SH-4	Library Furniture International	Display shelving - Match Existing	**Location :** Poet Tree Area
PP-1	Steelcase	Power pod	**Location :** Forum
PP-2	Library Furniture International	Power Tower	**Location:** Youth Computer Area 201d
MC-1	Bretford	Mobile charging cart	**Location :** Work Canter Supply Rm 406b

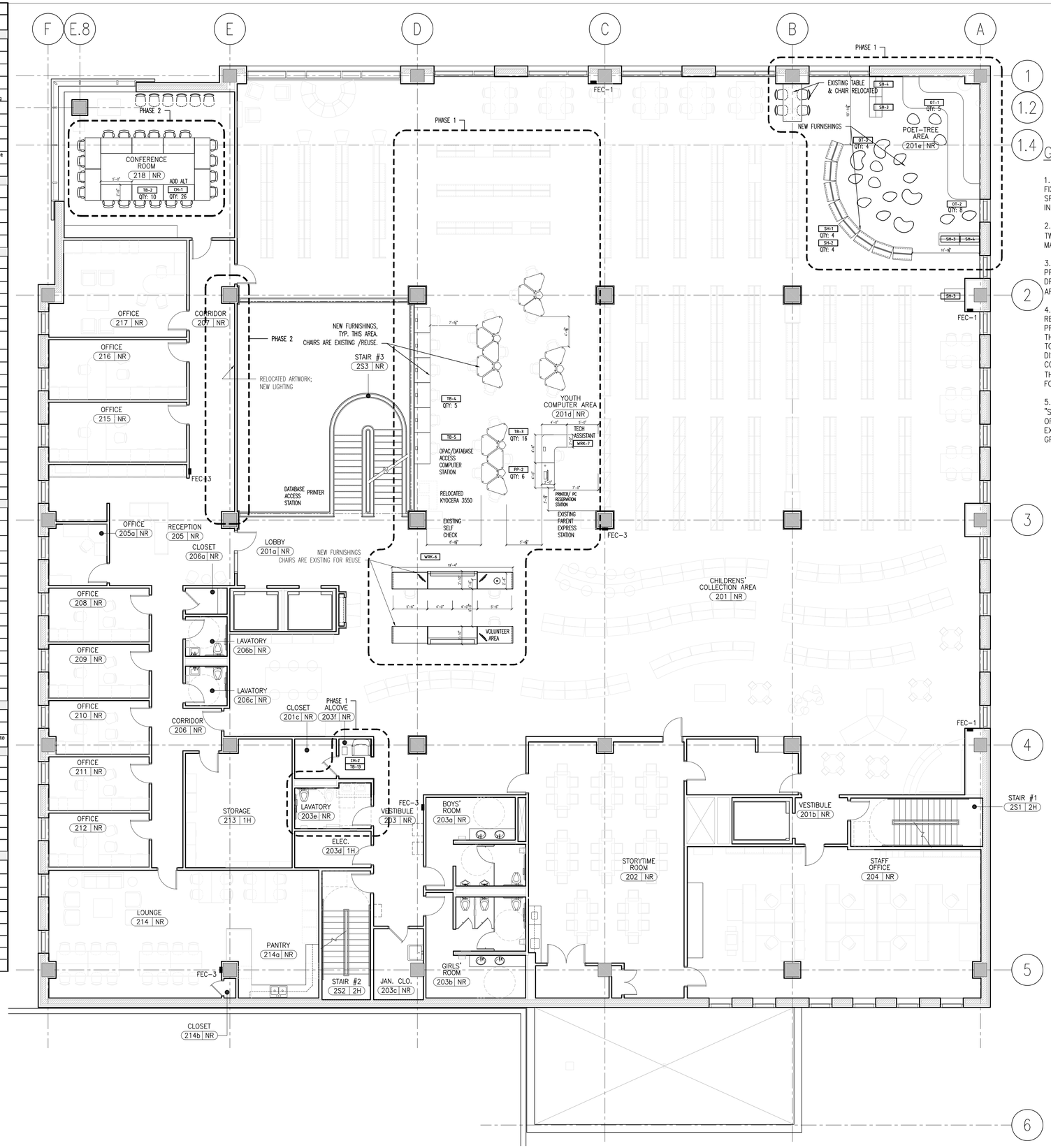

1 SECOND FLOOR FURNITURE PLAN
SCALE: 1/8" = 1'-0"

ARCHITECTURE PLANNING INTERIORS
LOHAN ANDERSON

BOARD OF LIBRARY TRUSTEES OF THE CITY OF DES PLAINES, OWNER
1501 ELLINWOOD ST., DES PLAINES, IL 60016

LOHAN ANDERSON, ARCH./INT.
401 N. MICHIGAN AVE., CHICAGO, IL 60611

CALOR DESIGN GROUP, LTD., MEP/FP
2217 N. WESTERN AVE., CHICAGO, IL 60647

C. S. ASSOCIATES, INC., STRUC.
4532 W. 103RD ST., OAK LAWN, IL 60453

GENERAL NOTES

1. REFER TO THE FURNITURE, FIXTURE AND EQUIPMENT SPECIFICATION GUIDE FOR PRODUCT INFORMATION.

2. FURNITURE WILL BE DELIVERED IN TWO (2) PHASES. SEE THE PROJECT MANUAL FOR REQUIREMENTS.

3. FURNITURE CONTRACTOR TO PROVIDE INSTALLATION SHOP DRAWINGS & FINISH SUBMITTALS FOR ARCHITECT'S REVIEW.

4. FURNITURE CONTRACTOR WILL BE RESPONSIBLE FOR CONFIRMING PRODUCT SIZES AND COMPONENTS IN THE SPECIFICATIONS AS THEY RELATE TO THE PLAN LAYOUT. ANY DISCREPANCIES OR LAYOUT CONCERNS SHOULD BE BROUGHT TO THE OWNER'S ATTENTION IMMEDIATELY FOR REVIEW.

5. FURNITURE INDICATED WITH A "SAND" HATCH PATTERN AS EXISTING OR EXISTING TO BE RELOCATED. EXISTING FURNITURE TO REMAIN ARE GRAY-TONE.

N

REV.	DATE	ISSUE
	14 AUG '15	BID AND PERMIT
	03 AUG '15	FFE/FINISH FINAL REVIEW MTG
	02 JULY '15	FFE/FINISH REVIEW MEETING
	05 MAY '15	DESIGN DEVELOPMENT
	06 MAR '15	SCHEMATIC DESIGN

DATE SIGNED:

Des Plaines Public Library Renovations

PROJECT NUMBER: 13300

2ND FLOOR FURNITURE PLAN

I2.21

Des Plaines Public Library

DRAWING LABEL	MANUFACTURER	PRODUCT	REMARKS
Chairs			
CH-1	Herman Miller	Task Chair - upholstered	ADD ALTERNATE : Admin Conference 218
CH-2	Herman Miller	Lounge Chair - with Arms	Location: Alcove 203f
CH-3	Bernhardt	Gaming Lounge Chair - upholstered	Location: The Commons
CH-4	Herman Miller Collection	Side Chairs -upholstered	Location : The Commons
CH-5	Herman Miller	Lounge Chair - upholstered	Location :Commons & Adult Collections 401g
CH-6	Herman Miller Collection	Task Chair	Location : Study Room 301e, The Commons Librarian Workstation
CH-7	Herman Miller Collection	Upholstered Side Chairs	Location : Ebar - Adult Collections
CH-8a	Herman Miller	Chair with casters - arms	Location : Forum
CH-8b	Herman Miller	Chair with casters - armless	Location : Forum
CH-9	Herman Miller	Lounge Chair - plywood frame	Location: Adult Collections Area 401, Lounge Area 401g
Stools			
ST-1	Herman Miller Collection	Stool counter height	Location: Creative Services
ST-2	Herman Miller Collection	Stool -counter height - fiberglass seat	Location: The Commons, Craft table
ST-3	Herman Miller Collection	Stool counter height - fiberglass upholstered	Location : Ebar - Adult Collections
ST-4	Herman Miller	Adjustable Height Task chair/stool	Location : Forum
Workstations			
WRK-1A TO 1D	Herman Miller	WORKSTATION	Location: Tech Services RM 111. Open office system: See Specifications
WRK-2A TO 2B	Herman Miller	WORKSTATION	Location: Tech Services RM 111. Open office system: See Specifications
WRK-3A TO 3F	Herman Miller	WORKSTATION	Location: Circulation Workroom 108. Open office system: See Specifications
WRK-4	Herman Miller	Benching System	Location : Circulation Workroom 108 Benching System: See Specifications
WRK-5	Existing/Reuse	Individual Workstation (Sit to Stand)	Location: Circulation Workroom 108
WRK-6	Library Furniture International	Information Desk 2nd Floor	Location : 2nd Floor
WRK-7	Herman Miller	Sit to Stand Desk with privacy screen/moveable Fixed Credenza	Location: Youth Computer Area 201d
WRK-8	Herman Miller	Librarian Workstation @ The Commons	Location : The Commons
WRK-9	Library Furniture International	Information Desk 3rd Floor	Location : 3rd Floor
WRK-10a	Library Furniture International	CustomLow nested worktable - desk ht	Location : Ebar - Adult Collections
WRK-10b	Library Furniture International	Custom High nested worktable - counter ht	Location : Ebar - Adult Collections
WRK-11	Library Furniture International	Information Desk 4th Floor	Location : 4th Floor
WRK-12	Herman Miller	Workstations	Location : Info Tech Dept 403
WRK-13	Herman Miller	Individual workstation Sit/Stand	Location: 4th Floor Open Area 401f
WRK-14A TO 14B	Herman Miller	WORKSTATION	Location: Creative Services Rm 304 . Open office system: See Specifications
WRK-15A TO 15F	Herman Miller	WORKSTATION	Location: Adult Services Rm 306 . Open office system: See Specifications
WRK-16A TO 16B	Herman Miller	WORKSTATION	Location: Adult Services Rm 306 . Open office system: See Specifications
WRK-17	Herman Miller	WORKSTATION	Location: Adult Services Rm 306 . Open office system: See Specifications
Tables			
TB-1	Herman Miller	Work table - Counter height /adjustable	Location : Circulation Workroom 108 See Specifications
TB-2	Geiger	Conference Training Table - Mobile/Stacking	Location: Administrative Conference Room 218
TB-3	3 Branch	Shape Computer table - 26" h /Mobile with power tower and acrylic shroud	Location: Youth Computer Area 201d
TB-4	3 Branch	Table - Youth height 26"H/power/data access at desktop	Location: Youth Computer Area 201d
TB-5	3 Branch	Table - Youth height 26"H/power/data access at desktop	Location: Youth Computer Area 201d
TB-6	Martin Brattrud	Lounge table	Location : The Commons
TB-7	Herman Miller	Mobile table	Location : The Commons
TB-8	Martin Brattrud	Round tablet table	Location : The Commons
TB-9	Nienkamper	Powered top/stool	Location : The Commons
TB-10	Geiger	Conference Table - Mobile/Stacking	Location : Study Room 301e
TB-11a	3 Branch	Mobile -Shape table - 29" h	Location : Forum
TB-11b	Nienkamper	Adjustable Height Table	Location : Forum
TB-12	Herman Miller	Universal Table	Location: Conference 108n
TB-13	Martin Brattrud	Rectangular Tablet Table	Location: Alcove 203f
Private Office			
PO-1	Herman Miller	Private Office desk system	Location: Tech Services Office 108j
PO-2	Existing / Reuse	Relocation furniture system	Location: Circulation Workrm Office 108o. Refer to Furniture Dealer's Drawings
PO-3	Existing / Reuse	Relocation furniture system	Location: Adult services Office 306a. Refer to Furniture Dealer's Drawings
Sofas, Benches, & Ottomans			
B-1	Berhardt Design	Mirador	Location : The Commons
B-2	Berhardt Design	Mirador	Location : Adult Collection Area 401
B-3	Berhardt Design	Mirador	Location : Adult Collection Area 301
OT-1	TMC	Splash Puddle stool	Location : Post Tree Area
OT-2	TMC	Little Puddle stool	Location : Post Tree Area
OT-3	TMC	Big Puddle stool	Location : Post Tree Area
OT-4	Nienkamper	Small ottoman/Stool	Location : The Commons
OT-5	Nienkamper	Small ottoman/Stool	Location : E-Bar Adult Collection Area 301
Miscellaneous Filing, Storage, Display or Shelving			
LF-1	Herman Miller	Lateral file cabinets	Location: Adult Services 306
SC-1	Herman Miller	Counter height - storage cabinets with worktop surround	Location: Circulation Workroom
SH-1	Library Furniture International	Low height/curved shelving unit end	Location : Post Tree Area
SH-2	Library Furniture International	Low height/curved shelving unit	Location : Post Tree Area
SH-3	Library Furniture International	Display shelving - Match Existing	Location : Post Tree Area
SH-4	Library Furniture International	Display shelving - Match Existing	Location : Post Tree Area
PP-1	Steelcase	Power pod	Location : Forum
PP-2	Library Furniture International	Power Tower	Location: Youth Computer Area 201d
MC-1	Bretford	Mobile charging cart	Location : Work Center Supply Rm 406b

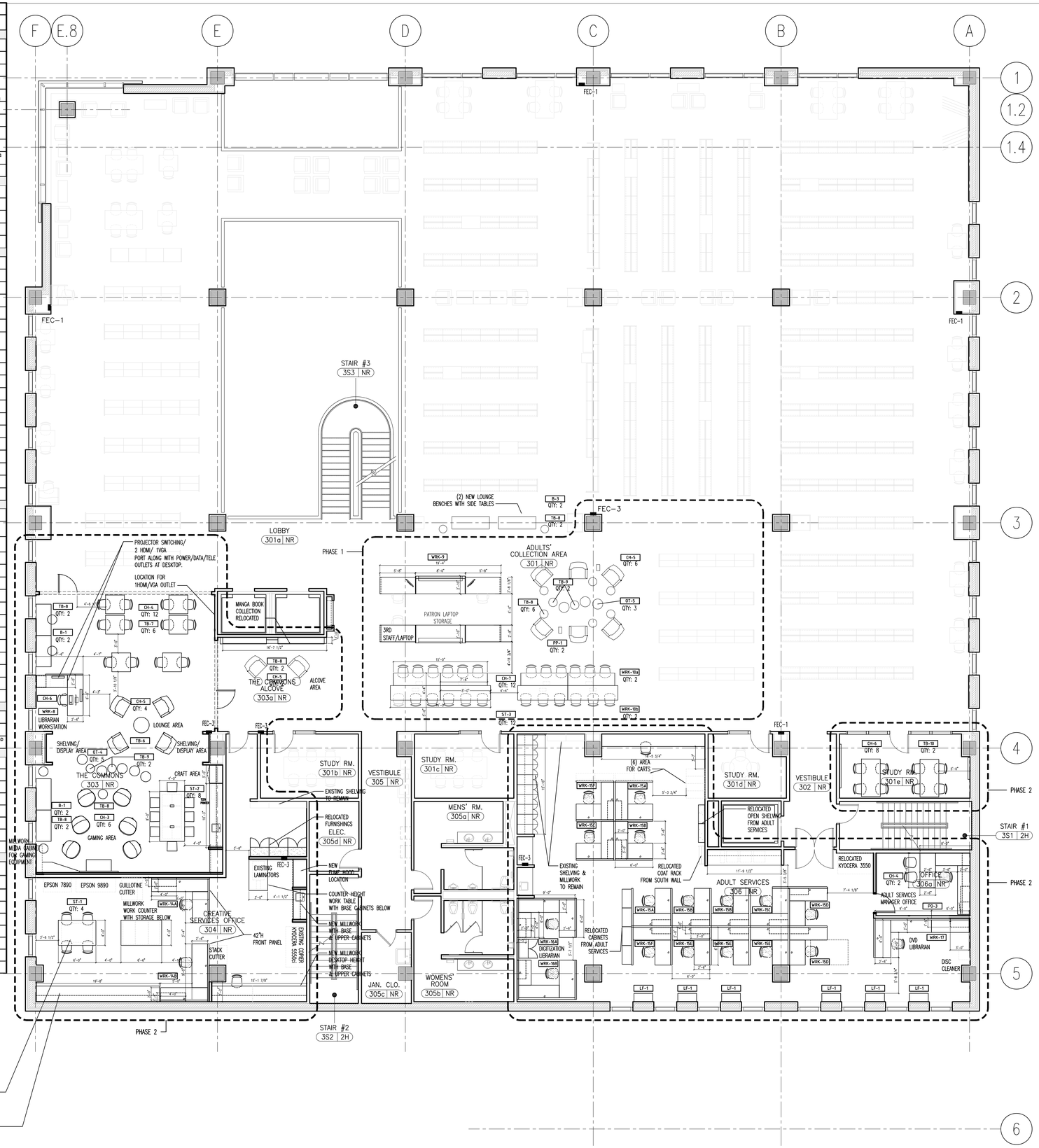

1 THIRD FLOOR FURNITURE PLAN
SCALE: 1/8" = 1'-0"

GENERAL NOTES

1. REFER TO THE FURNITURE, FIXTURE AND EQUIPMENT SPECIFICATION GUIDE FOR PRODUCT INFORMATION.

2. FURNITURE WILL BE DELIVERED IN TWO (2) PHASES. SEE THE PROJECT MANUAL FOR REQUIREMENTS.

3. FURNITURE CONTRACTOR TO PROVIDE INSTALLATION SHOP DRAWINGS & FINISH SUBMITTALS FOR ARCHITECT'S REVIEW.

4. FURNITURE CONTRACTOR WILL BE RESPONSIBLE FOR CONFIRMING PRODUCT SIZES AND COMPONENTS IN THE SPECIFICATIONS AS THEY RELATE TO THE PLAN LAYOUT. ANY DISCREPANCIES OR LAYOUT CONCERNS SHOULD BE BROUGHT TO THE OWNER'S ATTENTION IMMEDIATELY FOR REVIEW.

5. FURNITURE INDICATED WITH A "SAND" HATCH PATTERN AS EXISTING OR EXISTING TO BE RELOCATED. EXISTING FURNITURE TO REMAIN ARE GRAY-TONE.

ARCHITECTURE PLANNING INTERIORS
LOHAN ANDERSON

BOARD OF LIBRARY TRUSTEES OF THE CITY OF DES PLAINES, OWNER
1501 ELLINWOOD ST., DES PLAINES, IL 60016

LOHAN ANDERSON, ARCH./INT.
401 N. MICHIGAN AVE., CHICAGO, IL 60611

CALOR DESIGN GROUP, LTD., MEP/FP
2217 N. WESTERN AVE., CHICAGO, IL 60647

C. S. ASSOCIATES, INC., STRUC.
4532 W. 103RD ST., OAK LAWN, IL 60453

REV.	DATE	ISSUE
	14 AUG '15	BID AND PERMIT
	03 AUG '15	FFE/FINISH FINAL REVIEW MTG
	02 JULY '15	FFE/FINISH REVIEW MEETING
	05 MAY '15	DESIGN DEVELOPMENT
	06 MAR '15	SCHEMATIC DESIGN

DATE SIGNED:

Des Plaines Public Library Renovations

PROJECT NUMBER: 13300

3RD FLOOR FURNITURE PLAN

12.31

Des Plaines Public Library

DRAWING LABEL	MANUFACTURER	PRODUCT	REMARKS
Chairs			
CH-1	Herman Miller	Task Chair - upholstered	**ADD ALTERNATE :** Admin Conference 218
CH-2	Herman Miller	Lounge Chair - with Arms	**Location:** Alcove 203f
CH-3	Bernhardt	Gaming Lounge Chair - upholstered	**Location:** The Commons
CH-4	Herman Miller Collection	Side Chairs -upholstered	**Location :** The Commons
CH-5	Herman Miller	Lounge Chair - upholstered	**Location :** Commons & Adult Collections 401g
CH-6	Herman Miller Collection	Task Chair	**Location :** Study Room 301e, The Commons Librarian Workstation
CH-7	Herman Miller Collection	Upholstered Side Chairs	**Location :** Ebar - Adult Collections
CH-8a	Herman Miller	Chair with casters - arms	**Location :** Forum
CH-8b	Herman Miller	Chair with casters - armless	**Location :** Forum
CH-9	Herman Miller	Lounge Chair - plywood frame	**Location:** Adult Collections Area 401, Lounge Area 401g
Stools			
ST-1	Herman Miller Collection	Stool counter height	**Location:** Creative Services
ST-2	Herman Miller Collection	Stool -counter height - fiberglass seat	**Location:** The Commons, Craft table
ST-3	Herman Miller Collection	Stool counter height - fiberglass upholstered	**Location :** Ebar - Adult Collections
ST-4	Herman Miller	Adjustable Height Task chair/stool	**Location :** Forum
Workstations			
WRK-1A TO 1D	Herman Miller	WORKSTATION	**Location:** Tech Services RM 111. Open office system: See Specifications
WRK-2A TO 2B	Herman Miller	WORKSTATION	**Location:** Tech Services RM 111. Open office system: See Specifications
WRK-3A TO 3F	Herman Miller	WORKSTATION	**Location:** Circulation Workroom 108. Open office system: See Specifications
WRK-4	Herman Miller	Benching System	**Location :** Circulation Workroom 108 Benching System: See Specifications
WRK-5	Existing/Reuse	Individual Workstation (Sit to Stand)	**Location:** Circulation Workroom 108
WRK-6	Library Furniture International	Information Desk 2nd Floor	**Location :** 2nd Floor
WRK-7	Herman Miller	Sit to Stand Desk with privacy screen/moveable Fixed Credenza	**Location:** Youth Computer Area 201d
WRK-8	Herman Miller	Librarian Workstation @ The Commons	**Location :** The Commons
WRK-9	Library Furniture International	Information Desk 3rd Floor	**Location :** 3rd Floor
WRK-10a	Library Furniture International	CustomLow nested worktable - desk ht	**Location :** Ebar - Adult Collections
WRK-10b	Library Furniture International	Custom High nested worktable - counter ht	**Location :** Ebar - Adult Collections
WRK-11	Library Furniture International	Information Desk 4th Floor	**Location :** 4th Floor
WRK-12	Herman Miller	Workstations	**Location :** Info Tech Dept 403
WRK-13	Herman Miller	Individual workstation Sit/Stand	**Location:** 4th Floor Open Area 401f
WRK-14A TO 14B	Herman Miller	WORKSTATION	**Location:** Creative Services Rm 304 . Open office system: See Specifications
WRK-15A TO 15F	Herman Miller	WORKSTATION	**Location:** Adult Services Rm 306 . Open office system: See Specifications
WRK-16A TO 16B	Herman Miller	WORKSTATION	**Location:** Adult Services Rm 306 . Open office system: See Specifications
WRK-17	Herman Miller	WORKSTATION	**Location:** Adult Services Rm 306 . Open office system: See Specifications
Tables			
TB-1	Herman Miller	Work table - Counter height /adjustable	**Location :** Circulation Workroom 108 See Specifications
TB-2	Geiger	Conference Training Table - Mobile/Stacking	**Location:** Administrative Conference Room 218
TB-3	3 Branch	Shape Computer table - 28" h /Mobile with power tower and acrylic shroud	**Location:** Youth Computer Area 201d
TB-4	3 Branch	Table - Youth height 26"H/power/data access at desktop	**Location:** Youth Computer Area 201d
TB-5	3 Branch	Table - Youth height 26"H/power/data access at desktop	**Location:** Youth Computer Area 201d
TB-6	Martin Brattrud	Lounge table	**Location :** The Commons
TB-7	Herman Miller	Mobile table	**Location :** The Commons
TB-8	Martin Brattrud	Round tablet table	**Location :** The Commons
TB-9	Nienkamper	Powered top/stool	**Location :** The Commons
TB-10	Geiger	Conference Table - Mobile/Stacking	**Location :** Study Room 301e
TB-11a	3 Branch	Mobile -Shape table - 29" h	**Location :** Forum
TB-11b	Nienkamper	Adjustable Height Table	**Location :** Forum
TB-12	Herman Miller	Universal Table	**Location:** Conference 108n
TB-13	Martin Brattrud	Rectangular Tablet Table	**Location:** Alcove 203f
Private Office			
PO-1	Herman Miller	Private Office desk system	**Location:** Tech Services Office 108j
PO-2	Existing / Reuse	Relocation furniture system	**Location:** Circulation Workrm Office 108o. Refer to Furniture Dealer's Drawings
PO-3	Existing / Reuse	Relocation furniture system	**Location:** Adult services Office 306a. Refer to Furniture Dealer's Drawings
Sofas, Benches, & Ottomans			
B-1	Berhardt Design	Mirador	**Location :** The Commons
B-2	Berhardt Design	Mirador	**Location :** Adult Collection Area 401
B-3	Berhardt Design	Mirador	**Location :** Adult Collection Area 301
OT-1	TMC	Splash Puddle stool	**Location :** Post Tree Area
OT-2	TMC	Little Puddle stool	**Location :** Post Tree Area
OT-3	TMC	Big Puddle stool	**Location :** Post Tree Area
OT-4	Nienkamper	Small ottoman/Stool	**Location :** The Commons
OT-5	Nienkamper	Small ottoman/Stool	**Location :** E-Bar Adult Collection Area 301
Miscellaneous Filing, Storage, Display or Shelving			
LF-1	Herman Miller	Lateral file cabinets	**Location:** Adult Services 306
SC-1	Herman Miller	Counter height - storage cabinets with worktop surround	**Location:** Circulation Workroom
SH-1	Library Furniture International	Low height/curved shelving unit end	**Location :** Post Tree Area
SH-2	Library Furniture International	Low height/curved shelving unit	**Location :** Post Tree Area
SH-3	Library Furniture International	Display shelving - Match Existing	**Location :** Post Tree Area
SH-4	Library Furniture International	Display shelving - Match Existing	**Location :** Post Tree Area
PP-1	Steelcase	Power pod	**Location :** Forum
PP-2	Library Furniture International	Power Tower	**Location:** Youth Computer Area 201d
MC-1	Bretford	Mobile charging cart	**Location :** Work Center Supply Rm 406b

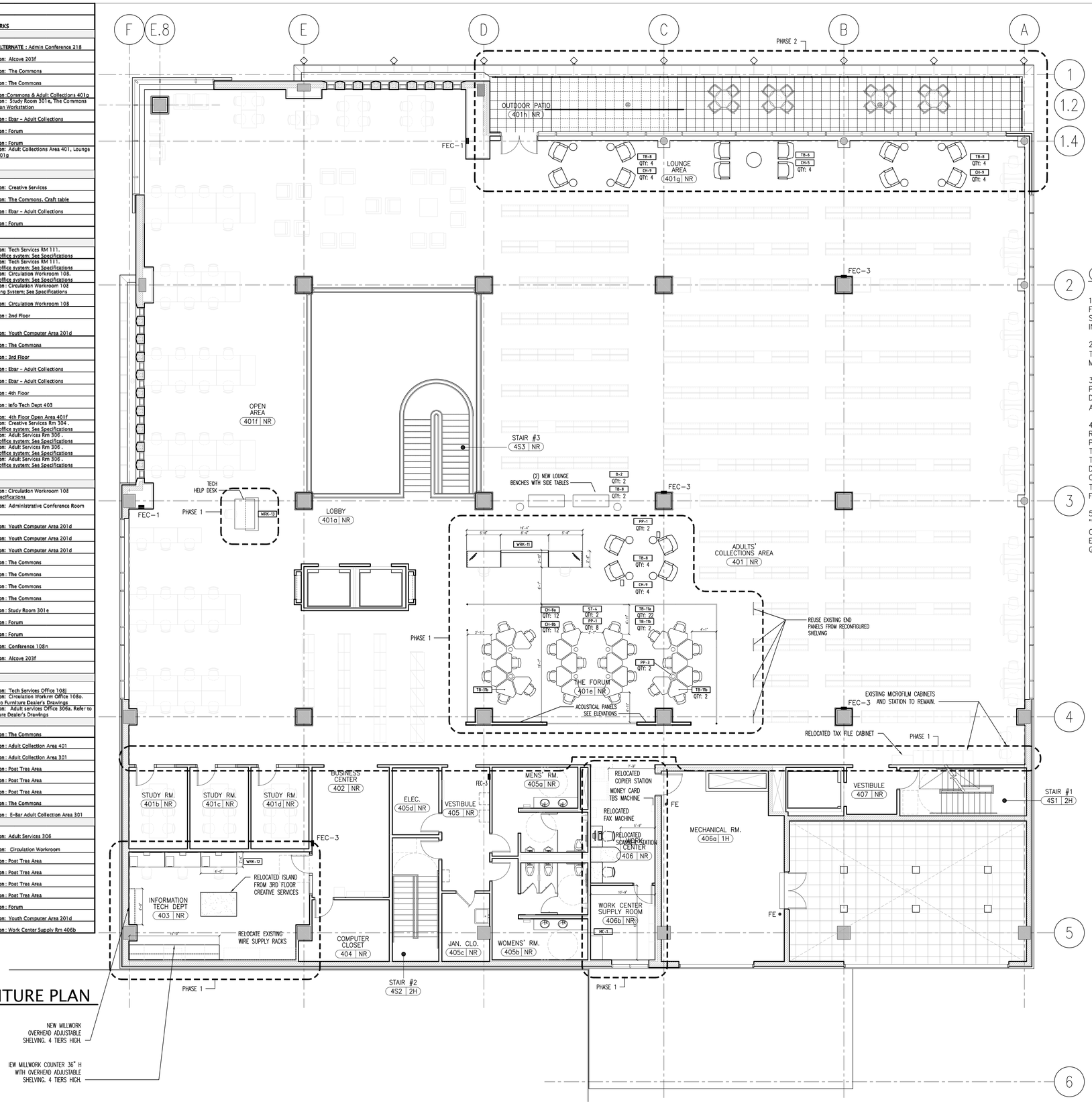

1 FOURTH FLOOR FURNITURE PLAN
SCALE: 1/8" = 1'-0"

GENERAL NOTES

1. REFER TO THE FURNITURE, FIXTURE AND EQUIPMENT SPECIFICATION GUIDE FOR PRODUCT INFORMATION.

2. FURNITURE WILL BE DELIVERED IN TWO (2) PHASES. SEE THE PROJECT MANUAL FOR REQUIREMENTS.

3. FURNITURE CONTRACTOR TO PROVIDE INSTALLATION SHOP DRAWINGS & FINISH SUBMITTALS FOR ARCHITECT'S REVIEW.

4. FURNITURE CONTRACTOR WILL BE RESPONSIBLE FOR CONFIRMING PRODUCT SIZES AND COMPONENTS IN THE SPECIFICATIONS AS THEY RELATE TO THE PLAN LAYOUT. ANY DISCREPANCIES OR LAYOUT CONCERNS SHOULD BE BROUGHT TO THE OWNER'S ATTENTION IMMEDIATELY FOR REVIEW.

5. FURNITURE INDICATED WITH A "SAND" HATCH PATTERN AS EXISTING OR EXISTING TO BE RELOCATED. EXISTING FURNITURE TO REMAIN ARE GRAY-TONE.

ARCHITECTURE PLANNING INTERIORS
LOHAN ANDERSON

BOARD OF LIBRARY TRUSTEES OF THE CITY OF DES PLAINES, OWNER
1501 ELLINWOOD ST., DES PLAINES, IL 60016

LOHAN ANDERSON, ARCH./INT.
401 N. MICHIGAN AVE., CHICAGO, IL 60611

CALOR DESIGN GROUP, LTD., MEP/FP
2217 N. WESTERN AVE., CHICAGO, IL 60647

C. S. ASSOCIATES, INC., STRUC.
4532 W. 103RD ST., OAK LAWN, IL 60453

REV.	DATE	ISSUE
	14 AUG '15	BID AND PERMIT
	03 AUG '15	FFE/FINISH FINAL REVIEW MTG
	02 JULY '15	FFE/FINISH REVIEW MEETING
	05 MAY '15	DESIGN DEVELOPMENT
	06 MAR '15	SCHEMATIC DESIGN

DATE SIGNED:

Des Plaines Public Library Renovations

PROJECT NUMBER: 13300

4TH FLOOR FURNITURE PLAN

I2.41

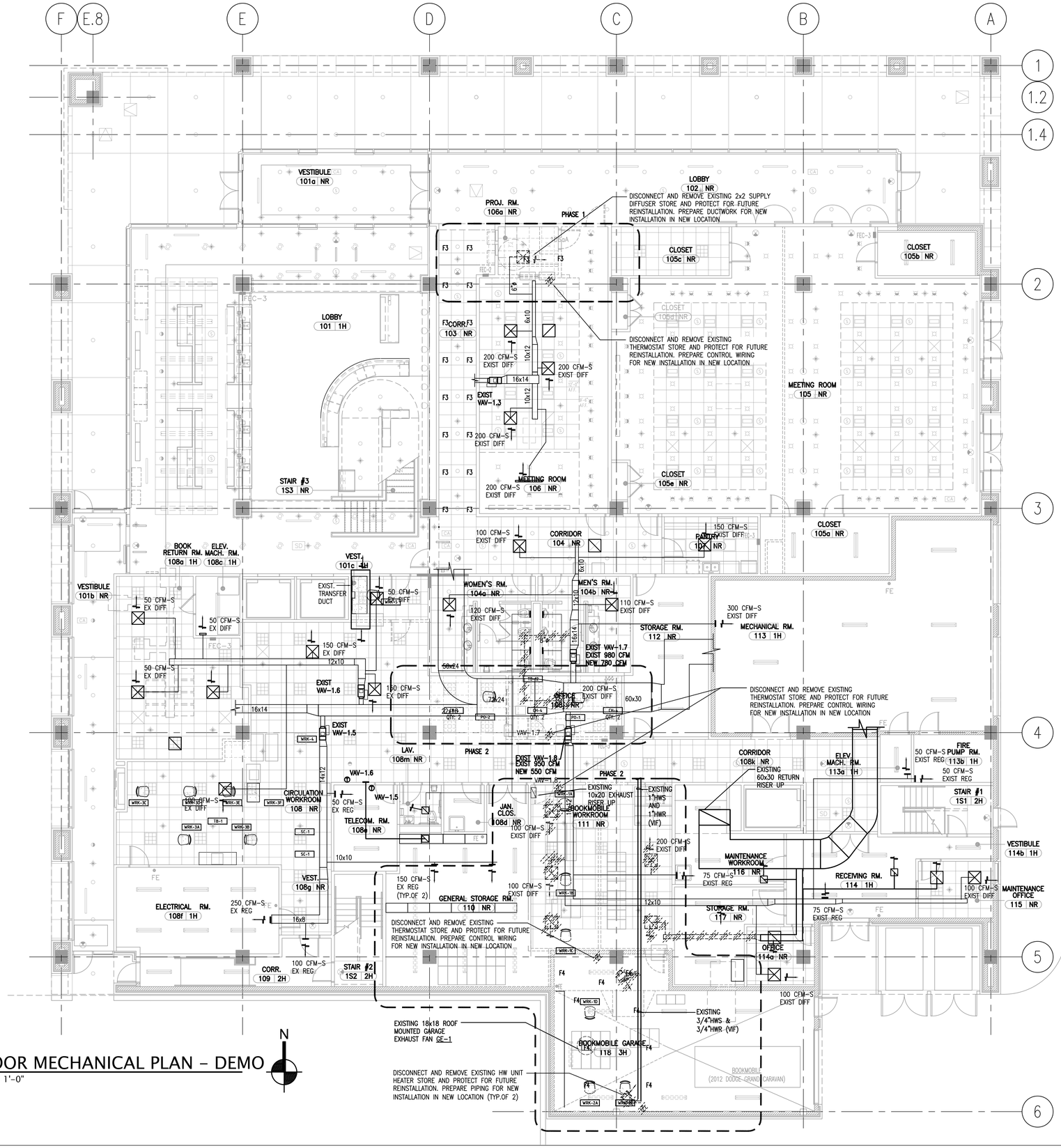

1 1ST FLOOR MECHANICAL PLAN - DEMO
SCALE: 1/8" = 1'-0"

ARCHITECTURE PLANNING INTERIORS
LOHAN ANDERSON

DES PLAINES PUBLIC LIBRARY, OWNER
1501 ELLINWOOD ST., DES PLAINES, IL 60016

LOHAN ANDERSON, ARCH./INT.
401 N. MICHIGAN AVE., CHICAGO, IL 60611

CALOR DESIGN GROUP, LTD., MEP/FP
2217 N. WESTERN AVE., CHICAGO, IL 60647

C. S. ASSOCIATES, INC., STRUC.
4532 W. 103RD ST., OAK LAWN, IL 60453

REV.	DATE	ISSUE
	8-14-15	ISSUE FOR BID AND PERMIT

DATE SIGNED:

Des Plaines Public Library
Phased Improvements

PROJECT NUMBER: 13300

1ST FLOOR MECHANICAL PLAN - DEMO

MD1.1

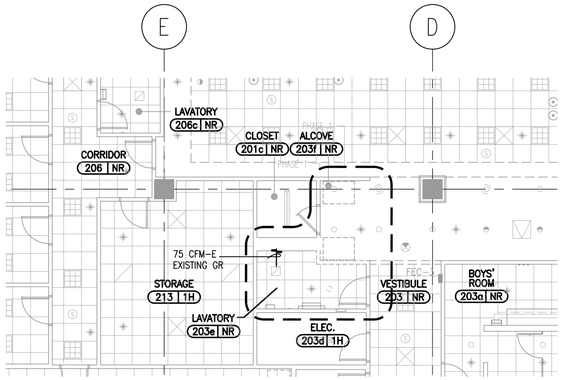

2 2ND FLOOR MECHANICAL PLAN- EXISTING

SCALE: 1/8" = 1'-0"

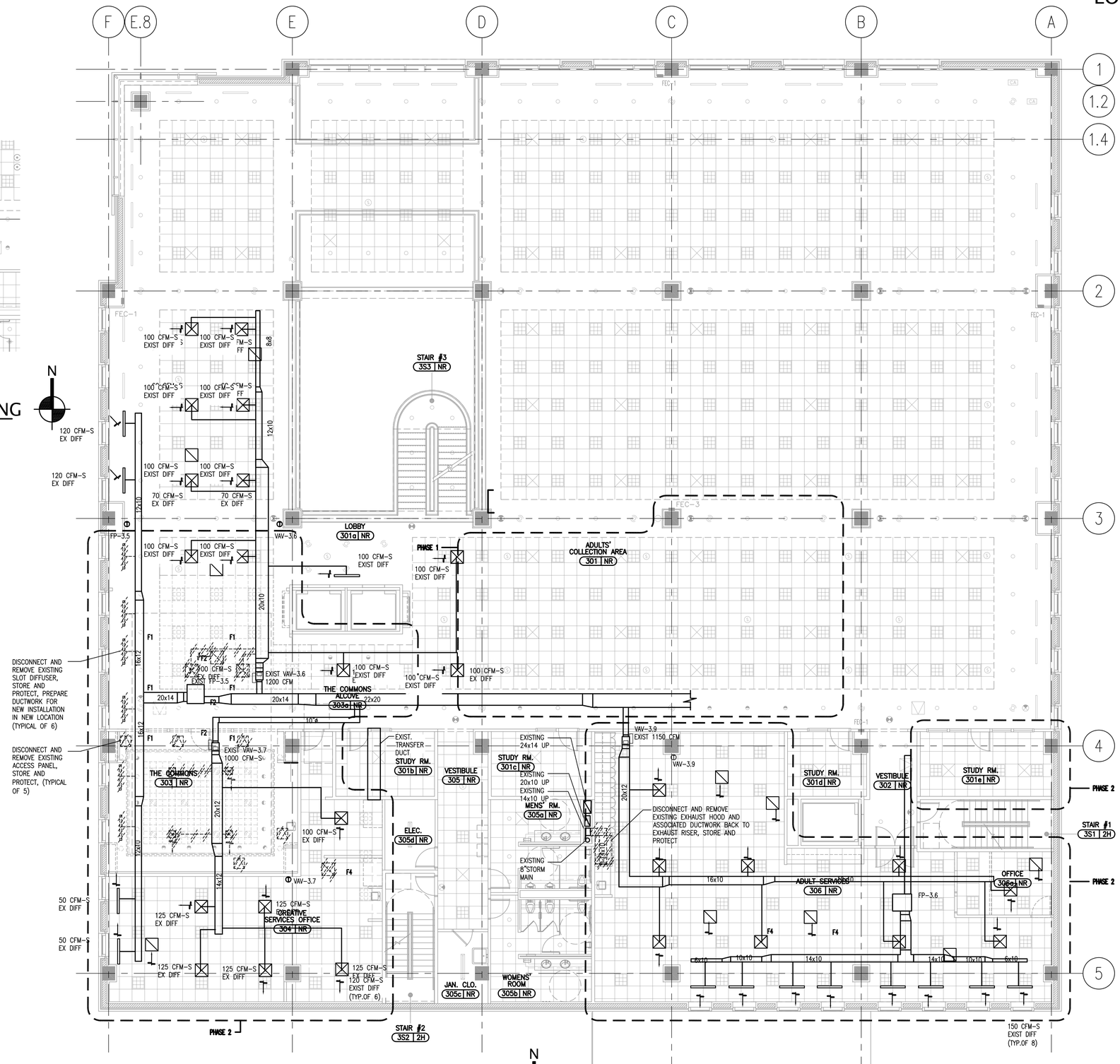

1 3RD FLOOR MECHANICAL PLAN- DEMO

SCALE: 1/8" = 1'-0"

ARCHITECTURE PLANNING INTERIORS

LOHAN ANDERSON

DES PLAINES PUBLIC LIBRARY, OWNER
1501 ELLINWOOD ST., DES PLAINES, IL 60016

LOHAN ANDERSON, ARCH./INT.
401 N. MICHIGAN AVE., CHICAGO, IL 60611

CALOR DESIGN GROUP, LTD., MEP/FP
2217 N. WESTERN AVE., CHICAGO, IL 60647

C. S. ASSOCIATES, INC., STRUC.
4532 W. 103RD ST., OAK LAWN, IL 60453

REV.	DATE	ISSUE
	8-14-15	ISSUE FOR BID AND PERMIT

DATE SIGNED:

Des Plaines Public Library
Phased Improvements

PROJECT NUMBER: 13300

2ND & 3RD FLOOR MECHANICAL PLAN DEMO

MD1.2

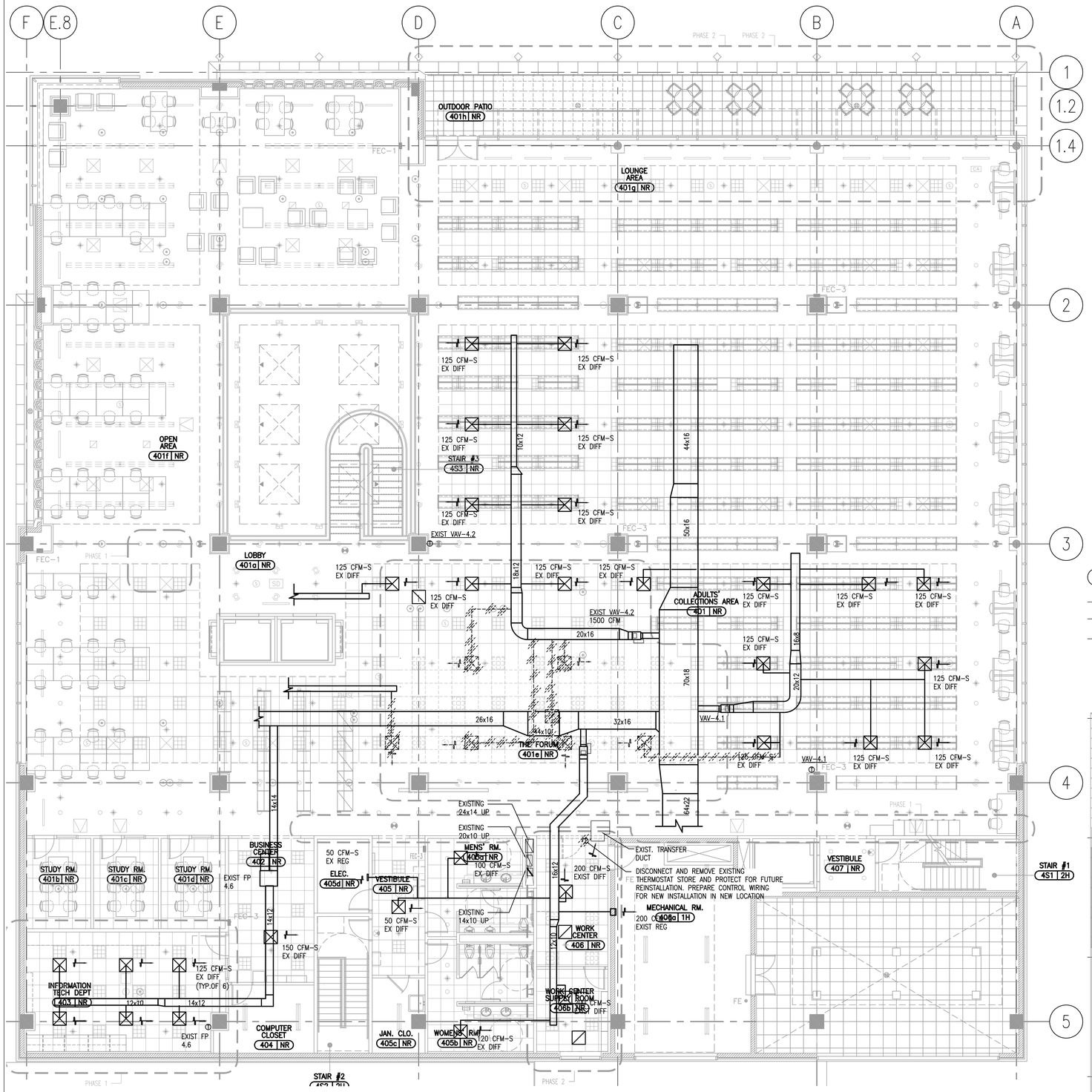

1 4TH FLOOR MECHANICAL PLAN – DEMO

SCALE: 1/8" = 1'-0"

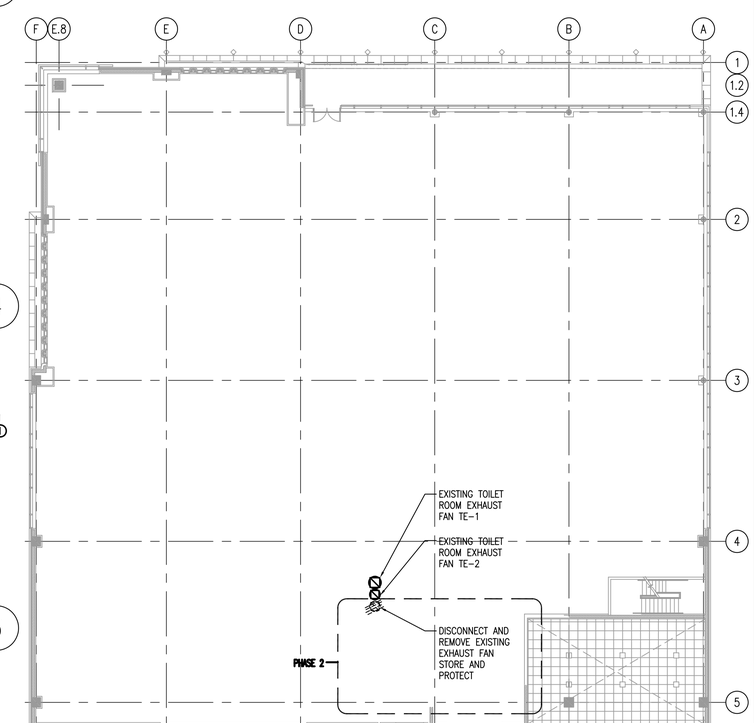

2 ROOF MECHANICAL PLAN – DEMO

SCALE: 1/16" = 1'-0"

ARCHITECTURE PLANNING INTERIORS

LOHAN ANDERSON

DES PLAINES PUBLIC LIBRARY, OWNER
1501 ELLINWOOD ST., DES PLAINES, IL 60016

LOHAN ANDERSON, ARCH./INT.
401 N. MICHIGAN AVE., CHICAGO, IL 60611

CALOR DESIGN GROUP, LTD., MEP/FP
2217 N. WESTERN AVE., CHICAGO, IL 60647

C. S. ASSOCIATES, INC., STRUC.
4532 W. 103RD ST., OAK LAWN, IL 60453

REV.	DATE	ISSUE
	8-14-15	ISSUE FOR BID AND PERMIT

DATE SIGNED:

Des Plaines Public Library
Phased Improvements

PROJECT NUMBER: 13300

4TH FLOOR MECHANICAL PLAN – DEMO

MD1.3

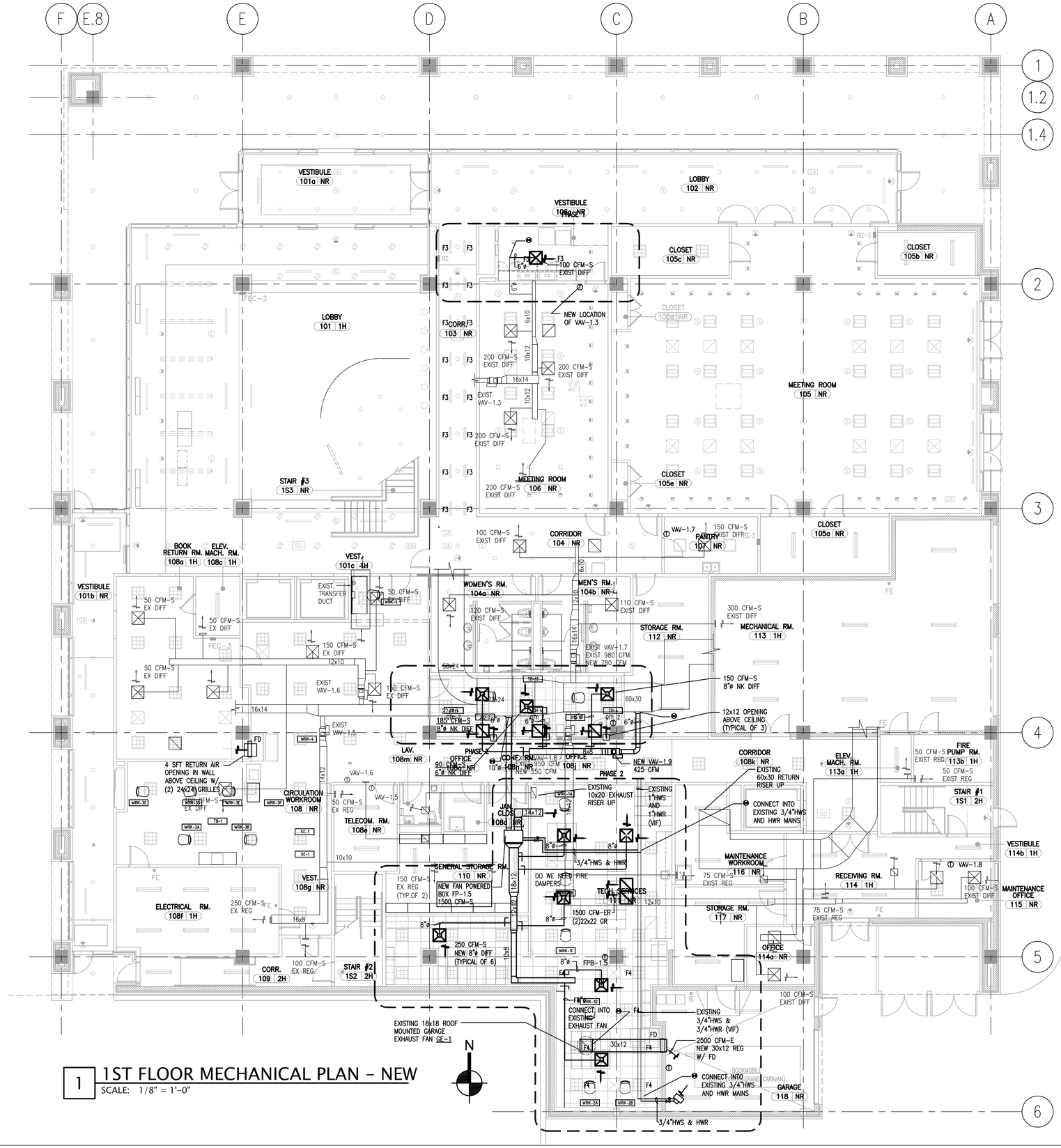

1 1ST FLOOR MECHANICAL PLAN - NEW

SCALE: 1/8" = 1'-0"

ARCHITECTURE PLANNING INTERIORS

LOHAN ANDERSON

DES PLAINES PUBLIC LIBRARY, OWNER
1501 ELLINWOOD ST., DES PLAINES, IL 60016

LOHAN ANDERSON, ARCH./INT.
401 N. MICHIGAN AVE., CHICAGO, IL 60611

CALOR DESIGN GROUP, LTD., MEP/FP
2217 N. WESTERN AVE., CHICAGO, IL 60647

C. S. ASSOCIATES, INC., STRUC.
4532 W. 103RD ST., OAK LAWN, IL 60453

REV.	DATE	ISSUE
	8-14-15	ISSUE FOR BID AND PERMIT

DATE SIGNED:

Des Plaines Public Library
Phased Improvements

PROJECT NUMBER: 13300

1ST FLOOR MECHANICAL PLAN - NEW

M1.1

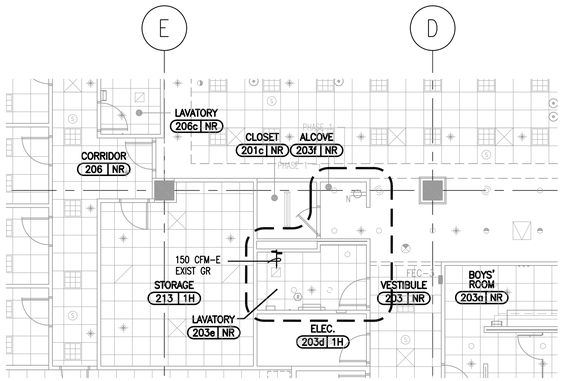

2 2ND FLOOR MECHANICAL PLAN- NEW
SCALE: 1/8" = 1'-0"

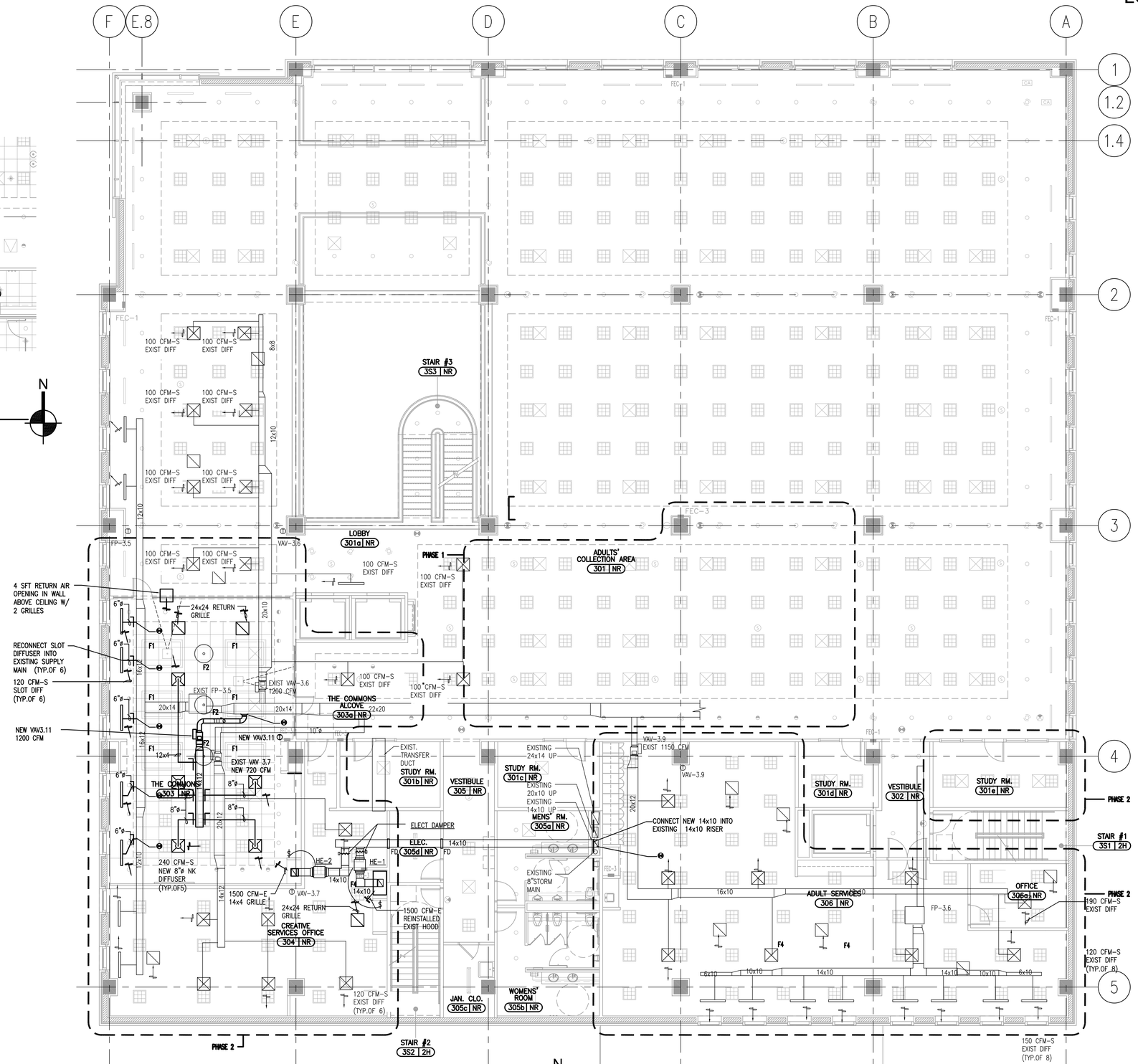

1 3RD FLOOR MECHANICAL PLAN- NEW
SCALE: 1/8" = 1'-0"

ARCHITECTURE PLANNING INTERIORS
LOHAN ANDERSON

DES PLAINES PUBLIC LIBRARY, OWNER
1501 ELLINWOOD ST., DES PLAINES, IL 60016

LOHAN ANDERSON, ARCH./INT.
401 N. MICHIGAN AVE., CHICAGO, IL 60611

CALOR DESIGN GROUP, LTD., MEP/FP
2217 N. WESTERN AVE., CHICAGO, IL 60647

C. S. ASSOCIATES, INC., STRUC.
4532 W. 103RD ST., OAK LAWN, IL 60453

REV.	DATE	ISSUE
	8-14-15	ISSUE FOR BID AND PERMIT

DATE SIGNED:

Des Plaines Public Library
Phased Improvements

PROJECT NUMBER: 13300

2ND & 3RD FLOOR MECHANICAL PLANS NEW

M1.2

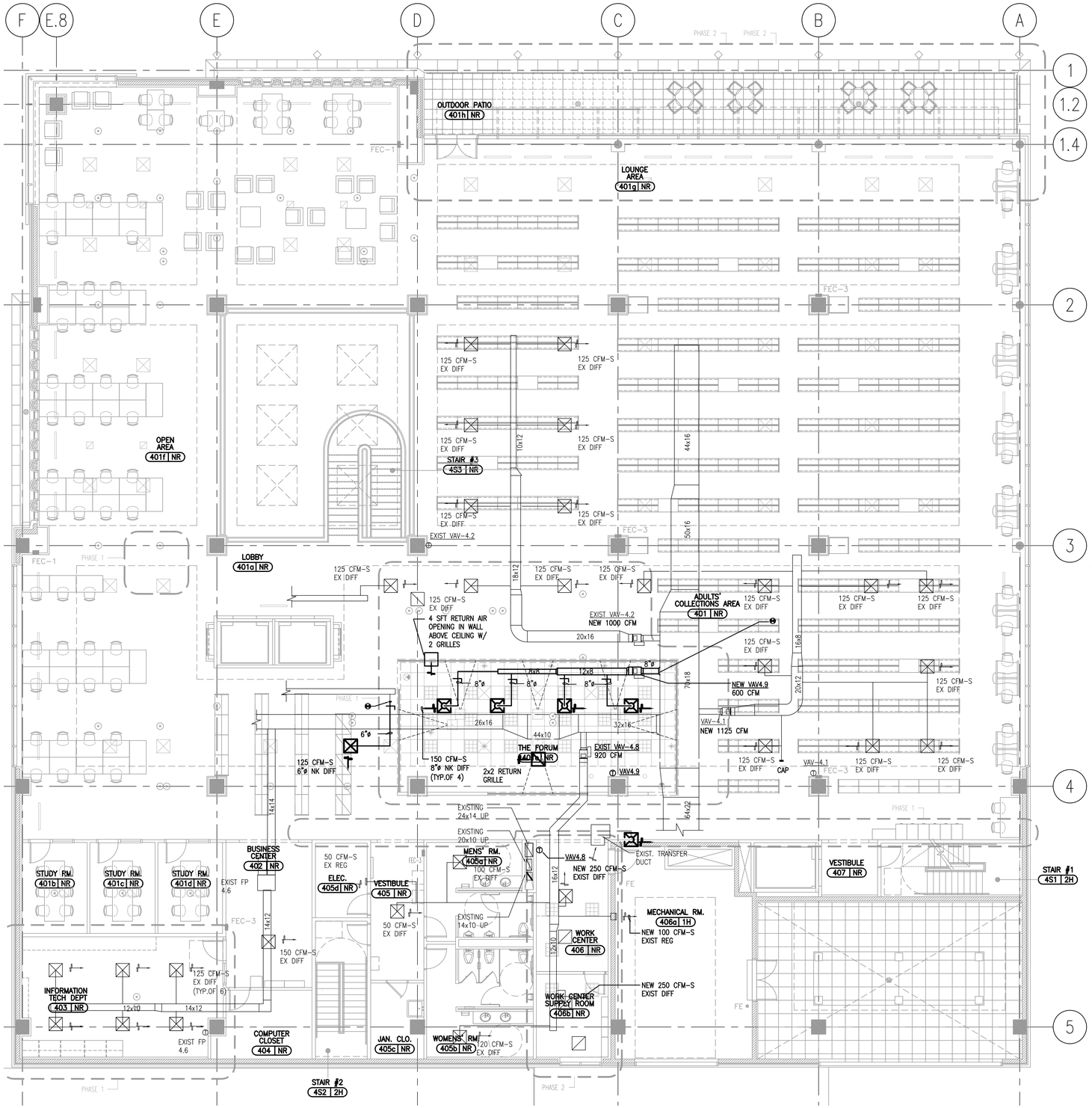

1 4TH FLOOR MECHANICAL PLAN - NEW
SCALE: 1/8" = 1'-0"

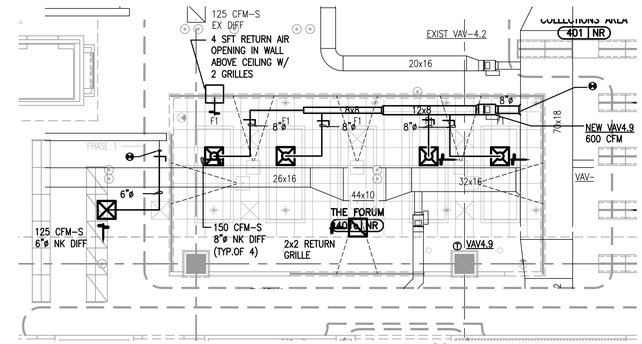

3 PLAN DETAIL ADD-ALT. #6
SCALE: 1/8" = 1'-0"

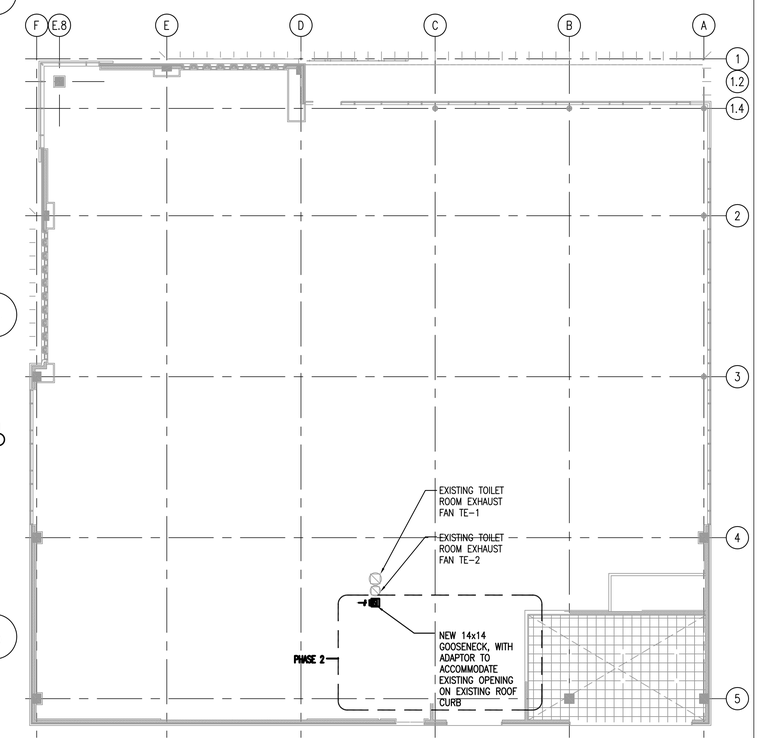

2 ROOF MECHANICAL PLAN - NEW
SCALE: 1/16" = 1'-0"

ARCHITECTURE PLANNING INTERIORS
LOHAN ANDERSON

DES PLAINES PUBLIC LIBRARY, OWNER
1501 ELLINWOOD ST., DES PLAINES, IL 60016

LOHAN ANDERSON, ARCH./INT.
401 N. MICHIGAN AVE., CHICAGO, IL 60611

CALOR DESIGN GROUP, LTD., MEP/FP
2217 N. WESTERN AVE., CHICAGO, IL 60647

C. S. ASSOCIATES, INC., STRUC.
4532 W. 103RD ST., OAK LAWN, IL 60453

REV.	DATE	ISSUE
	8-14-15	ISSUE FOR BID AND PERMIT

DATE SIGNED:

Des Plaines Public Library
Phased Improvements

PROJECT NUMBER: 13300

4TH FLOOR MECHANICAL PLAN - NEW

M1.3

MECHANICAL NOTES

1	THE CONTRACTOR SHALL FOLLOW ALL HEATING, VENTILATING AND AIR CONDITIONING (HVAC) REGULATIONS OF THE VILLAGE OF DESPLAINES AND APPROVED VERSION OF THE INTERNATIONAL MECHANICAL CODE.
2	THE CONTRACTOR SHALL GUARANTEE ALL MATERIALS, DEVICES, EQUIPMENT, WORKMANSHIP AND THE SUCCESSFUL OPERATION OF ALL SYSTEMS AND APPARATUS INSTALLED FOR A PERIOD OF ONE YEAR FROM THE DATE OF FINAL ACCEPTANCE. SEE THE SPECIFICATIONS FOR DETAIL INTERPRETATION OF ALL INSTALLATION REQUIREMENTS.
3	THE CONTRACTOR SHALL FURNISH ALL MATERIALS, EQUIPMENT, AND LABOR NECESSARY FOR WORK TO EXISTING AND/OR NEW HEATING, VENTILATING AND AIR CONDITIONING SYSTEMS IN ACCORDANCE WITH ALL GOVERNING CODES, THE DRAWINGS, APPROVED SUBMITTALS, OWNER'S REQUIREMENTS AND AS SPECIFIED.
4	THE CONTRACTOR SHALL TAKE SUCH PROTECTIVE MEASURES AND PRECAUTIONS AS MAY BE REQUIRED OR NECESSARY TO PREVENT INJURY OR ACCIDENTS IN ACCORDANCE WITH THE PARTICULAR CONDITIONS AND OSHA REQUIREMENTS.
5	ALL POWER WIRING SHALL BE PROVIDED BY THE ELECTRICAL CONTRACTOR. THE CONTRACTOR SHALL PROVIDE ALL NECESSARY INFORMATION & DEVICES (INCLUDING STARTERS FOR MECHANICAL EQUIPMENT) FOR THE ELECTRICAL INSTALLATIONS.
6	CONTROL WIRING, DEVICES, ETC. SHALL BE PROVIDED BY THE CONTRACTOR. VERIFY ALL CONTROL AND SEQUENCE OF OPERATION NEEDS WITH THE OWNER.
7	THE CONTRACTOR SHALL SUPPLY ALL HANGERS AND SUPPORTS FOR HIS WORK.
8	THE DRAWINGS DO NOT DETAIL ALL FINAL CONNECTIONS TO EQUIPMENT. THE CONTRACTOR SHALL VERIFY SUCH CONNECTIONS PER THE MANUFACTURERS' SHOP DRAWINGS AND OTHER REQUIREMENTS.
9	LAYOUT IS DIAGRAMMATIC AND CONTRACTOR SHALL PROVIDE DESIGN BUILD BID PRICING FOR THE HEATING WORK, INCLUDING NEW CONTROLS, DUCTWORK, AND NEW EXHAUST FANS. INSTALL EQUIPMENT, PIPING, AND DUCTWORK TO MEET FIELD CONDITIONS, AND PROVIDE SHOP DRAWINGS AS NECESSARY. EXACT LOCATION OF DUCTWORK, EQUIPMENT, GRILLES, AND REGISTERS SHALL BE APPROVED BY THE ARCHITECT WITH REFERENCE TO ANY LOCATIONS INDICATED. VERIFY ALL CONDITIONS, SUCH AS INTERIOR WALL SYSTEMS, ETC. WITH OTHER TRADES. COORDINATE ALL WORK WITH OTHER TRADES. MAINTAIN PROPER CLEARANCES AND HEADROOM AT THE EQUIPMENT AND DEVICES FOR INSPECTION AND SERVICE. CHANGE DIMENSIONS OF DUCTWORK WHEN REQUIRED TO MEET JOB CONDITIONS BUT MAINTAIN THE SAME EQUIVALENT CROSS SECTIONAL AREA. ALL DUCTWORK DIMENSIONS SHOWN ARE INSIDE, CLEAR MEASUREMENTS, MINIMUM CROSSECTIONAL AREA, INSIDE OF DUCT LINING OR INSULATION.
10	ALL DUCTWORK, EXCEPT AS NOTED, SHALL BE GALVANIZED STEEL AND SHALL BE CONSTRUCTED PER AIR DUCT DESIGN AND CONSTRUCTION STANDARDS OF ASHRAE, SMACNA AND LOCAL CODES. ALL DUCTS SHALL BE SMOOTH AND AIRTIGHT. TAPE ALL TRANSVERSE JOINTS DURING THE INSTALLATION.
11	THE CONTRACTOR SHALL TEST, BALANCE AND ADJUST ALL SYSTEMS AND PLACE IN PROPER OPERATION (WITHIN 5 PERCENT OF DESIGN RATINGS) AS PER THE SPECIFICATIONS AND INDUSTRY STANDARDS. PROVIDE BALANCE REPORTS AS PER NEBB STANDARDS. COMFORT BALANCE MULTIPLE TIMES, AND SEASONALLY, IF NECESSARY TO THE USERS SATISFACTION.
12	ALL DUCTWORK AND PIPING SHALL RUN CONCEALED IN WALLS, JOIST SPACES AND/OR IN CEILING SPACES. WHEN PIPING OR DUCTWORK IS REQUIRED TO BE EXPOSED, IT MUST RUN PARALLEL TO STRUCTURAL MEMBER OR EXACTLY PERPENDICULAR TO STRUCTURE. RUN AS OBSCURE AS POSSIBLE AS DIRECTED BY ARCHITECT.
13	MECHANICAL EQUIPMENT SHALL BE LOCATED AND INSTALLED TO PREVENT TRANSMISSION OF OBJECTIONABLE SOUND.
14	ALL PIPING AND DUCTWORK TO BE SUSPENDED FROM STRUCTURAL MEMBERS OF BUILDING, AS APPROVED BY ARCHITECT REPRESENTATIVE.
15	ALL RETURN DUCTS SHALL HAVE 1.0", 3 LBS. FIBERGLASS LINING. ROUND SUPPLY DIFFUSER AND TERMINAL UNIT TAKE-OFFS SHALL BE HAVE 1 INCH 3/4 LB. FIBERGLASS INSULATION. ALL RECTANGULAR SUPPLY DUCTS SHALL INSULATED WITH A MINIMUM OF 1", 3/4 POUND FIBERGLASS (MINIMUM R = 4.0) WIRED IN PLACE AT 18 INCH CENTERS. ALL DUCT INSULATION SHALL MEET U.L. 181 CLASS AND NFPA 90A AND 90B, AND SHALL HAVE A FLAME SPREAD AND SMOKE DENSITY OF FHC 25/50.
16	PROVIDE THERMOSTATS 48 INCH ABOVE FINISHED FLOOR, WITHIN 5'-0" OF RETURN GRILLES, UNLESS DIRECTED OTHERWISE.
17	COMPLETE EQUIPMENT AND INSTALLATION SHOP DRAWINGS SHALL BE FURNISHED AND REVIEWED PRIOR TO ANY CONSTRUCTION. REFER TO AIA 201 DOCUMENTS INCLUDING GENERAL CONDITIONS OF THE CONTRACT FOR CONSTRUCTION (1997 OR LATEST EDITION) FOR SUBMITTAL AND OTHER CONTRACT ADMINISTRATION PROVISIONS.
18	MAINTAIN AS-BUILT SET OF CONTRACT DRAWINGS ON ALL WORK AS INSTALLED, SHOWING SIZE AND LOCATION CHANGES. GIVE REFERENCE DIMENSIONS FOR THE LOCATION OF ANY CONCEALED ITEMS REQUIRING ADJUSTMENT, INSPECTION, SERVICE OR REPLACEMENT. DRAWING BACKGROUNDS SHALL BE FURNISHED TO THE CONTRACTOR BY THE ARCHITECT IF NEEDED. PROVIDE COMPLETE OPERATION AND MAINTENANCE MANUALS, WRITTEN AND VERBAL INSTRUCTIONS, GUARANTEES AND WARRANTIES, WRITTEN VERIFICATION THAT ALL PUNCH-LISTS ARE COMPLETE AND OTHER CLOSE-OUT WORK AND DOCUMENTATION PRIOR TO FINAL PAYMENTS.
19	THE MECHANICAL CONTRACTOR SHALL PROVIDE A COMPLETE AND OPERATING TEMPERATURE CONTROLS FOR ALL MECHANICAL EQUIPMENT. ALL CONTROL WIRING (LOW AND LINE VOLTAGE) SHALL BE PROVIDED. INSTALL ALL PACKAGED HVAC SYSTEM CONTROLS. PROVIDE ALL DEVICES, SOFTWARE AND PROGRAMMING TO PROVIDE CONTROL SEQUENCES FOR ALL HVAC EQUIPMENT, EITHER STANDARD AND/OR SPECIFIED CONTROL FUNCTIONS.
20	ALL DUCTS SHALL BE CONSTRUCTED OF IRON, STEEL, ALUMINUM OR OTHER CODE APPROVED MATERIAL. DUCTS SHALL BE CONSTRUCTED AS SPECIFIED IN THE SMACNA HVAC DUCT CONSTRUCTION STANDARDS — METAL AND FLEXIBLE. FOR THIS PROJECT ALL SUPPLY, RETURN AND EXHAUST DUCTWORK SHALL BE SMACNAS LOW PRESSURE STATIC PRESSURE CLASSIFICATION (UP TO 2" W.C.), UNLESS NOTED OTHERWISE. ALL EXPOSED, ROUND DUCTWORK SHALL HAVE SPIRAL SEAM CONSTRUCTION AS FOLLOWS: DIAMETER (INCHES) SHEET METAL GUAGE DIAMETER (INCHES) SHEET METAL GUAGE 0 TO 14 26 15 TO 26 24 27 TO 36 22 37 TO 50 20 51 TO 84 18 LOW-PRESSURE DUCT SYSTEMS ALL LONGITUDINAL AND TRANSVERSE JOINTS, SEAMS AND CONNECTIONS OF SUPPLY AND RETURN DUCTS OPERATING AT A STATIC PRESSURE LESS THAN OR EQUAL TO 2 INCHES W.G. (500 PA) SHALL BE SECURELY FASTENED AND SEALED WITH WELDS, GASKETS, MASTICS (ADHESIVES), MASTIC-PLUS-EMBEDDED-FABRIC SYSTEMS OR TAPES INSTALLED IN ACCORDANCE WITH THE MANUFACTURER'S INSTALLATION INSTRUCTIONS. PRESSURE CLASSIFICATIONS SPECIFIC TO THE DUCT SYSTEM SHALL BE CLEARLY INDICATED ON THE CONSTRUCTION DOCUMENTS IN ACCORDANCE WITH CHAPTER 18-28 OF THE MUNICIPAL CODE OF CHICAGO. ALL JOINTS, LONGITUDINAL AND TRANSVERSE SEAMS AND CONNECTIONS SHALL BE SECURELY FASTENED AND SEALED WITH WELDS, GASKETS, MASTICS (ADHESIVES), MASTIC-LUS-EMBEDDED-FABRIC SYSTEMS OR TAPES. TAPES AND MASTICS USED WITH FLEXIBLE AIR DUCTS AND AIR CONNECTORS SHALL BE LISTED AND LABELED IN ACCORDANCE WITH UL 181B. DUCT CONNECTIONS TO SHEET METAL FITTINGS OR FLANGES OF AIR DISTRIBUTION SYSTEM EQUIPMENT AND APPLIANCES SHALL BE MECHANICALLY FASTENED.

VENTILATION SCHEDULE

INTERNATIONAL MECHANICAL CODE

NO.	ROOM NAME	OCCUPANCY CLASSIFICATION	FLOOR AREA (SQ.FT.)	PERSONS /1000 SQ. FT. (# WCs OR CFM /SQ FT)	ESTIMATED NUMBER OF PEOPLE	REQUIRED OA CFM PER PERSON	REQUIRED EXHAUST AIR (CFM)	REQUIRED OUTSIDE AIR (CFM)	ACTUAL SUPPLY AIR (CFM)	ACTUAL OUTSIDE AIR (CFM)	ACTUAL EXHAUST AIR (CFM)	SUPPLY FAN	EXHAUST FAN
												AHU-1	**RF-1**
106a	VESTIBULE	CORR/UTILITY	154	0.05	0	NA	NA	8	100	8	8	VAV 1.3	BALANCE
104	CORRIDOR	CORR/UTILITY		0.05	0	NA	NA	0	100	0	0	VAV 1.7	EXIST
104a	WOMEN	TOILET ROOM		3	0	75	0	225	120	0	225	VAV 1.7	TE-1
104b	MEN	TOILET ROOM		3	0	75	0	225	110	0	225	VAV 1.7	TE-1
107	PANTRY	KITCHEN	150	20	20	1	20	20	150	20	0	VAV 1.7	EXIST
113	MECH RM	CORR/UTILITY		0.05	0	NA	NA	0	100	0	0	VAV 1.7	EXIST
									580			VAV 1.7	BALANCE
108	CIRCULATION WORKRM	OFFICE		7	3	20	0	60	300	60	60	VAV 1.6	EXIST
108b	SORTING ROOM	OFFICE		7	4	20	0	80	300	80	80	VAV 1.6	EXIST
108c	ELEV EQ RM	CORR/UTILITY		0.05	0	NA	NA	0	50	0	0	VAV 1.6	EXIST
									650			VAV 1.6	BALANCE
108d	JANITOR CLOSET	CORR/UTILITY		0.05	0	NA	NA	0	0	0	0		
108e	TELECOM ROOM	CORR/UTILITY		0.05	0	NA	NA	0	50	0	0	VAV 1.5	EXIST
~~108g~~	~~VESTIBULE~~	~~CORR/UTILITY~~		~~0.05~~	~~0~~	~~NA~~	~~NA~~	~~0~~	~~0~~	~~0~~	~~0~~		
108f	ELECTRICAL ROOM	CORR/UTILITY		0.05	0	NA	NA	0	250	0	0	VAV 1.5	EXIST
109	CORRIDOR	CORR/UTILITY		0.05	0	NA	NA	0	100	0	0	VAV 1.5	EXIST
110	GENERAL STORAGE	CORR/UTILITY		0.05	0	NA	NA	0	300	0	0	VAV 1.5	EXIST
									700			VAV 1.5	BALANCE
108j	OFFICE	OFFICE	101	7	1	20	1	20	150	20	20	**VAV 1.9**	**NEW**
108n	OFFICE	OFFICE	83	7	1	20	1	20	125	20	20	**VAV 1.9**	**NEW**
108o	OFFICE	OFFICE	103	7	1	20	1	20	150	20	20	**VAV 1.9**	**NEW**
			287						425			**VAV 1.9**	**NEW**
~~108k~~	~~CORRIDOR~~	~~CORR/UTILITY~~		~~0.05~~	~~0~~	~~NA~~	~~NA~~	~~0~~	~~14~~	~~0~~	~~0~~		
~~108m~~	~~LAVATORY~~	~~TOILET ROOM~~		~~1~~	~~0~~	~~75~~	~~0~~	~~75~~	~~0~~	~~0~~	~~75~~		TE-1
111	WORKROOM	OFFICE	1,302	7	9.1	20	9	182	1500	182	182	**FP 1.6**	**NEW**
113a	ELEV EQ RM	CORR/UTILITY		0.05	0	NA	NA	0	150	150	150	VAV 1.8	EXIST
114	RECEIVING ROOM	OFFICE		7	0	20	0	0	75	75	75	VAV 1.8	EXIST
114a	OFFICE	OFFICE		7	0	20	0	0	100	100	100	VAV 1.8	EXIST
114b	VESTIBULE	CORR/UTILITY		0.05	0	NA	NA	0	0	0	0	VAV 1.8	EXIST
115	MAINTEN OFFICE	OFFICE		7	0	20	0	0	100	100	100	VAV 1.8	EXIST
116	MAINTEN WORKRM	OFFICE		7	0	20	0	0	75	75	75	VAV 1.8	EXIST
117	STORAGE	CORR/UTILITY		0.05	0	NA	NA	0	50	50	50	VAV 1.8	EXIST
									550			VAV 1.8	BALANCE
118	WORKROOM	CORR/UTILITY	502	0.05	0	NA	NA	0	0	0	2500	EXIST	GE-1
203E	LAVATORY	TOILET ROOM	85	2	0	75	0	150	0	150	0	**BALANCE**	**TE-1**
												AHU-2	**EF-2**
~~301e~~	~~STUDY ROOM~~	~~LIBRARY~~	~~210~~	~~20~~	~~4.2~~	~~15~~	~~4~~	~~63~~	~~220~~	~~63~~	~~63~~	~~VAV 3.10~~	~~EXIST~~
303	STUDY ROOM	LIBRARY	1274	20	25.5	15	25	382	1200	382	382	**VAV 3.5**	**NEW**
304	STAFF OFFICE	OFFICE	1,068	7	7.5	20	7	0	720	150	150	VAV 3.7	BALANCE
									560	0	0	FP 3.5	EXIST
									1280				
~~306~~	~~STAFF OFFICE~~	~~OFFICE~~	~~2,148~~	~~7~~	~~15.0~~	~~20~~	~~15~~	~~301~~	~~1000~~	~~301~~	~~301~~	~~VAV 3.9~~	~~EXIST~~
									~~1200~~	~~0~~	~~0~~	~~FP 3.6~~	~~EXIST~~
306a	OFFICE	OFFICE	150	7	1.1	20	1	21	150	21	21	VAV 3.9	BALANCE
									2350				
401z	**ADULT FORUM**	**LIBRARY**	**792**	**20**	**15.8**	**15**	**16**	**238**	**900**	**238**	**238**	**VAV 4.9**	**NEW**
403	IT WORKROOM	OFFICE	483	7	3.4	20	3	68	750	68	68	FP 4.6	EXIST
406	STAFF WORKROOM	OFFICE	344	7	2.4	20	2	48	500	48	48	VAV 4.8	EXIST

GRILLES REGISTERS AND DIFFUSERS

NOTES

NOTE: ALL DIFFUSERS, REGISTERS AND GRILLES SHALL HAVE FINISHES APPROVED BY THE ARCHITECT, FRAMES TO MATCH FLOOR, WALL AND CEILING FINISHES, MAXIMUM NOISE LEVELS OF NC-25 AND OPPOSED BLADE DAMPERS, UNLESS NOTED AS A **GRILLE (GR)** IS WITHOUT A DAMPER. EXACT REGISTER LOCATIONS, TYPES AND FINISHES SHALL BE APPROVED BY THE ARCHITECT PRIOR TO PURCHASE OR INSTALLATION.

ALL DIFFUSERS MUST MATCH NARROW TEE OR OTHER EXISTING CEILING TYPES.

SALVAGE AND RE-USED ALL EXISTING DIFFUSERS GRILLES AND REGISTERS. REFINISH AND REINSTALL WITH NEW FRAMES AND DAMPERS, OR TURN-OVER TO THE BUILDING ENGINEERS IN REUSABLE CONDITION, WHEN REPLACED.

MANUFACTURERS:

PRICE, TITUS EXACTLY EQUAL TO THE EXISTING DIFFUSERS. PROVIDE SAMPLE OF EACH TYPE OF DIFFUSERS PRIOR TO INSTALLATION TO CONFIRM MATCH WITH EXISTING.

GRILLE, REGISTER AND DIFFUSER TYPE	MODEL NO.	DESCRIPTION
PLENUM RETURN DIFFUSERS (NK) PERFORATED FACE	PRICE PDDR	PERFORATED FACE GRILLES WITH WHITE BAKED ENAMEL FINISH AND OPPOSED BLADE DAMPERS, TYPICALLY 24 X 24 LAYOUT CEILING FRAME OR 1 INCH BORDER FRAME AS SHOWN OR AS REQUIRED IN THE FOLLOWING MODULES: 12 IN. X 12 IN. 24 IN. X 12 IN. 16 IN. X 16 IN. 20 IN. X 20 IN. 24 IN. X 24 IN. 48 IN. X 24 IN, *PROVIDE AS NOTED WITH 12 INCH HIGH LINED, FULL-SIZE (24 X 24) CEILING RETURN GRILLES.*
SUPPLY DIFFUSERS (NK) PERFORATED FACE	PRICE PDSP	PERFORATED FACE GRILLES WITH WHITE BAKED ENAMEL FINISH AND OPPOSED BLADE DAMPERS, 4 WAY PATTERN AVAILABLE WITH EITHER FACTORY SET SIDE THROW OR DIAGONAL THROW, CHANGEABLE IN THE FIELD. HINGED, REMOVABLE PERFORATED FACE SCREEN WITH QUICK-RELEASE SPRING LATCHES. TYPICALLY 24 X 24 LAYOUT CEILING FRAME OR 1 INCH BORDER FRAME AS SHOWN OR AS REQUIRED IN THE FOLLOWING MODULES: 12 IN. X 12 IN. 24 IN. X 12 IN. 16 IN. X 16 IN. 20 IN. X 20 IN. 24 IN. X 24 IN. 48 IN. X 24 IN.
SUPPLY REGISTER (REG)	PRICE 620DAL (ALUMINUM)	DOUBLE-DEFLECTION REGISTER WITH OPPOSED BLADE DAMPER AND WHITE BAKED ENAMEL FINISH.
EXHAUST /RETURN REGISTERS (REG)	PRICE 630DAL (ALUMINUM)	45 DEGREE FIXED BLADE REGISTER WITH 3/4" ON CENTER BLASED, OPPOSED BLADE DAMPER AND WHITE BAKED ENAMEL FINISH. GRILLE (GR) IS WITHOUT DAMPER.

EXHAUST FAN SCHEDULE

GREENHECK, CARNES, OR COOK EQUAL FANS. (EQUAL SIZE, CFM, RPM, HP, SP, MATERIALS, CONTROLS, ETC.).

UNIT TAG	SERVICE	AIR VOLUME (CFM)	STATIC PRESSURE (INCH)	RPM	MOTOR HP/VOLT S/PHASE	DIMENSIONS/ DUCT/DAMPER (INCHES)	FAN TYPE	LOCATION	MODEL	CONTROLS
NEW FANS										
					208 VOLT					
HE-1	HOOD EXHAUST	UP TO 1500	0.5	1140	ECM 0.75 HP, 120 VOLT, 1 PHASE	23 X 23 X 22, 19 X 19 DUCT	INLET, DIRECT DRIVE CENTRIFUGAL	INLINE	GREENHECK SQ-140 VG-3/4	W/ WALL MOUNTED ECM SPEED CONTROL & ON/OFF SWITCH
HE-2	HOOD EXHAUST	UP TO 1500	0.5	1140	ECM 0.75 HP, 120 VOLT, 1 PHASE	23 X 23 X 22, 19 X 19 DUCT	INLET, DIRECT DRIVE CENTRIFUGAL	INLINE	GREENHECK SQ-140 VG-3/4	W/ WALL MOUNTED ECM SPEED CONTROL & ON/OFF SWITCH
EF-3	VENDING AREA - **ALTERNATE NO. ???**	250	0.5	1100	4.4 AMPS, 120/1	11.25H x 14W x 11L, 8 X 8 DUCT	CEILING, CENTRIFUGAL	INLINE	GREENHECK CSP-A390	BAS TIME CLOCK CONTROL
EXISTING FANS										
TE-1	TOILET ROOMS 1ST AND 2ND FLOORS	2430	0.75				SPUN-ALUM, BELT DRIVE CENTRIFUGAL	ROOF	GREENHECK GB-160-7-X	
TE-2	TOILET ROOMS 3RD AND 4TH FLOORS	2140	0.75				SPUN-ALUM, BELT DRIVE CENTRIFUGAL	ROOF	GREENHECK GB-130-5X	
HE-1	STAFF EXHAUST	1500	0.5	DISCONNECT, REMOVE AND TURN OVER TO THE OWNER.			SPUN-ALUM, BELT DRIVE CENTRIFUGAL	ROOF	GREENHECK GB-130-4X	
GE-1	BOOKMOBILE GARAGE EXHAUST	2500	0.5					ROOF	GREENHECK	

GENERAL FAN NOTES

1	ALL FANS ARE FURNISHED AND INSTALLED BY MC. ALL STARTERS ARE FURNISHED BY MC AND INSTALLED BY EC. POWER WIRING IS BY EC AND CONTROL WIRING IS BY MC.
2	ALL FANS SHALL BE 120 VOLT, 1 PHASE OR 208 VOLT, 3 PHASE AS NOTED **AND AS VERIFIED IN THE FIELD**. MODIFY THE FAN SUBMITTALS TO MATCH FIELD CONDITIONS. MECHANICAL CONTRACTOR DIRECT THE ELECTRICAL CONTRACTOR TO
3	WHERE EXISTING CURBS ARE BEING RETAINED, PROVIDE PREFABRICATED, CURB EXTENSIONS TO MATCH THE NEW FANS TO THE EXISTING CURBS.
4	ALL FANS SHALL HAVE PREFABRICATED WALL LOUVER OR ROOF HOOD DISCHARGE WITH BACKDRAFT DAMPER AND BIRDSCREEN. PROVIDE WITH WEATHERPROOF FLASHING. FOR FLAT ROOF DISCHARGE, PROVIDE WITH INSULATED CURB, MINIMUM OF 12 INCHES ABOVE FINISHED ROOF. PROVIDE SHEET METAL CURB CAP INTEGRAL ROOF WEATHERPROOF
5	PROVIDE ELECTRONIC COMMUTATING MOTORS (ECM), ON SINGLE PHASE FAN MOTORS, INCLUDING AS NOTED FOR 0.25 TO 2.0 HP MOTORS. PROVIDE WITH REMOTE DIAL ADJUSTMENT, VARIABLE FAN SPEED CONTROL.

FAN-POWERED BOX (FP) SCHEDULE

EXISTING FAN POWERED BOX MODEL: PRICE MODEL FDC15000, 2 ROW HOT WATER COIL, 10 AMP, 120 VOLTS,

ELECTRIC-ACTUATED, HEATING AND COOLING, CONSTANT VOLUME, PRESSURE INDEPENDENT SINGLE PRIMARY DUCT, FAN-POWERED BOX WITH INDIVIDUAL DDC SENSOR/TEMPERATURE CONTROLLERS.

PROVIDE NEW DIRECT DIGITAL CONTROLS FOR EACH NEW TERMINAL UNIT BOX. THE CONTROL HARDWARE, SOFTWARE, INSTALLATION AND SET-UP MUST MATCH THE LIBRARY'S EXISTING CONTROL SYSTEM. THE MECHANICAL CONTRACTOR MUST ENGAGE THE TEMPERATURE CONTROL CONTRACTOR APPROVED BY THE LIBRARY. THE NEW AND EXISTING CONTROLS MUST BE FULLY INTEGRATED INTO THE LIBRARY'S BUILDING AUTOMATION SYSTEM (BAS).

FAN-POWERED BOX TAG	ROOM NUMBER	SERVICE AREA	SPACE MAXIMUM AIR QUANTITY (CFM)	SPACE MINIMUM AIR QUANTITY (CFM)	FP BOX SIZE / INLET (INCH DIAMETER)	OUTLET SIZE	MINIMUM HEATING OUTPUT (MBH)	HEATING INPUT (HW GPM)
NEW FAN POWERED BOX MODEL: PRICE MODEL FDC15000, 1 ROW, STANDARD HOT WATER COIL, 10 AMP, 120 VOLTS,								
NEW FP 1.6	**111**	**WORKROOM**	**1500**	**300**	**10 INCH**	**14 X 12**	**36**	**3.6**

VARIABLE VOLUME (VAV) BOX SCHEDULE

NEW AND EXISTING VAV BOX MODEL: PRICE MODEL SDV 5000

ELECTRIC-ACTUATED, COOLING ONLY, PRESSURE INDEPENDENT SINGLE DUCT VAV BOX WITH INDIVIDUAL DDC SENSOR/TEMPERATURE CONTROLLERS.

PROVIDE NEW DIRECT DIGITAL CONTROLS FOR EACH NEW TERMINAL UNIT BOX. THE CONTROL HARDWARE, SOFTWARE, INSTALLATION AND SET-UP MUST MATCH THE LIBRARY'S EXISTING CONTROL SYSTEM. THE MECHANICAL CONTRACTOR MUST ENGAGE THE TEMPERATURE CONTROL CONTRACTOR APPROVED BY THE LIBRARY. THE NEW AND EXISTING CONTROLS MUST BE FULLY INTEGRATED INTO THE LIBRARY'S BUILDING AUTOMATION SYSTEM (BAS).

VAV BOX TAG	ROOM NUMBER	SERVICE AREA	SPACE MAXIMUM AIR QUANTITY (CFM)	SPACE MINIMUM AIR QUANTITY (CFM)	VAV BOX SIZE / INLET (INCH DIAMETER)	OUTLET SIZE	HEATING OUTPUT (MBH)	HEATING INPUT (HW GPM)
NEW VAV 1.9	**108j**	**OFFICE**	**150**					
	108n	**OFFICE**	**90**					
	108o	**OFFICE**	**185**					
NEW VAV 1.9		**TOTAL**	**425**	**85**	**6 INCH**	**10 X 8**	**0**	**0.0**
EXIST VAV 1.6	108, 108b, 108c	CIRCULATION WORKROOM, SORTING	550	110	8 INCH	12 X 10	0	0.0
EXIST VAV 1.7	104, 104a, 104b, 107, 113	CORRIDOR, PANTRY, WOMEN, MEN, MECH RM	780	156	10 INCH	14 X 12	0	0.0
EXIST VAV 1.8	113a, 114, 115, 116, 117	STORAGE, WORKROOMS, OFFICES, ELEV EQ RM	550	110	8 INCH	12 X 10	0	0.0
NEW VAV 3.11	**303**	**STUDY ROOM**	**1200**	**240**	**10 INCH**	**14 X 12**	**0**	**0.0**
EXIST VAV 3.7	304	STAFF OFFICE	720	144	10 INCH	14 X 12	0	0.0
EXIST VAV 4.2	401	ADULT	1000	200	12 INCH	16 X 14	0	0.0
NEW VAV 4.9	401z	**ADULT FORUM**	**600**	**120**	**8 INCH**	**12 X 10**	**0**	**0.0**

VAV AND FP BOXES NOTES

1	THE VARIABLE AIR VOLUME BOXES AND FAN POWERED BOXES ARE BASED ON PRICE MODEL SDV AND MODEL FDC 15000, DDC, PRESSURE INDEPENDENT, SINGLE DUCT UNITS, WITH MULTI-POINT SENSORS, I INCH THICK INSULATION. BOXES SHALL BE SIZED AS SPECIFIED, AND RIGHT OR LEFT CONFIGURATION AS REQUIRED BY FIELD CONDITIONS.
2	BOX FEATURES SHALL INCLUDE THE FOLLOWING: MINIMUM AND MAXIMUM CFM SETTINGS (MAX. HEATING AND COOLING CFM AS NEEDED), CONTROL SIGNAL ACCURACY OF + OR - 5 %, LOW LEAKAGE DAMPERS (2% AT 3" SP), MAXIMUM RADIATED SOUND LEVEL OF NC-30 AND MAXIMUM DISCHARGE SOUND LEVEL OF NC-40, MAXIMUM INLET VELOCITY OF 2200 FPM.
3	UNITS SHALL BE EQUIPED WITH AN AVERAGING PRIMARY AIR INLET SENSOR WITH A MINIMUM OF 4 SENSOR POINTS; CONTROLLER SHALL BE CAPABLE OF PRESSURE INDEPENDENT OPERATION DOWN TO 0.03 INCHES W.G. DIFFERENTIAL PRESSURE WITH AN INLET VELOCITY OF 500 FPM.
4	TERMINAL UNITS SHALL BE FURNISHED TO ACCEPT CONTROLLER SUPPLIED BY BUILDING AUTOMATION SYSTEM (BAS) CONTRACTOR AND SHALL BE FACTORY INSTALLED AS SPECIFIED IN THE TEMPERATURE CONTROL SPECIFCATIONS. FACTORY MOUNTED SAFETIES AND OTHER CONTROLS SHALL NOT INTERFER WITH THIS CONTROLLER.
5	UNIT PRIMARY AIR VALVE SHALL MODULATE IN RESPONSE TO THE ROOM MOUNTED THERMOSTAT (TEMPERATURE SENSOR) AND SHALL MAINTAIN AIR FLOW IN RELATION TO THE TEMPERATURE SETTING, REGARDLESS OF THE SYSTEM PRESSURE. THE CONTROLLER SHALL BE SET TO NORMALLY OPEN WHEN THERE IS A LOSS OF CONTROL SIGNAL. THE THERMOSTAT SHALL HAVE ADJUSTABLE SETTINGS IN LOCATION, AS DIRECTED BY THE OWNER.
6	CONTRACTOR SHALL PROVIDE 120 VOLT CONTROL POWER TO EACH VAV BOX, WITH LOCAL DISCONNECT SWITCH AND CONTROL TRANSFORMER---120 VOLT TO 24 VOLT (VERIFY ACTUAL REQUIREMENT).

MECHANICAL SCOPE OF WORK — MASTER PLAN PHASES 1 AND 2

	ROOM NO.	MECHANICAL	PLUMBING & FIRE PROTECTION
FIRST FLOOR PHASE 1			
VESTIBULE (SNACK/VENDING) (FORMER PROJECTION ROOM)	106A	RE-INSTALL AND RE-BALANCE EXISTING CEILING DIFFUSER	
VESTIBULE (SNACK/VENDING) (FORMER PROJECTION ROOM)	106A		SPRINKLER HEAD RELOCATION
			PROVIDE HOT DRINK VENDING MACHINE WITH COLD WATER
FIRST FLOOR PHASE 2			
TECHNICAL WORKROOM (FORMER GEN. STORAGE & MOBILE GARAGE)	111	DISCONNECT & REMOVE SUPPLY DIFFUSERS AND RETURN GRILLES IN PROJECT AREA	
		NEW FAN-POWERED (FP) BOX WITH HOT WATER COIL, CONNECTED TO SUPPLY MAIN AND DISTRIBUTION DUCTWORK, PIPING, POWER & CONTROLS	
		SIX NEW CEILING DIFFUSERS AND TWO NEW RETURN DIFFUSERS	
TECHNICAL WORKROOM (FORMER GEN. STORAGE & MOBILE GARAGE)	111		DISCONNECT & REMOVE FROM GLYCOL-FILLED, ANTI-FREEZE SPRINKLER ZONE.
			INSTALL NEW SPRINKLER HEADS FROM WET SPRINKLER ZONE.
			ONE NEW STAFF SINK
MAINTENANCE WORKROOM, STORAGE, RECEIVING, OFFICES	113A, 114, 115, 116, 117	**REBALANCE VAV BOXES AND CEILING DIFFUSERS**	
WORKROOM (STORAGE AND SMALLER GARAGE)	118	DISCONNECT & REMOVE TWO HOT WATER UNIT HEATERS, PIPING, POWER & CONTROLS	
		RE-INSTALL ONE HOT WATER UNIT HEATER, PIPING, POWER & CONTROLS	
		RE-INSTALL POWER & CONTROLS FOR EXISTING EXHAUST FAN AND INSTALL NEW DUCTWORK FROM FAN TO WORKROOM WITH EXHAUST REGISTER AND FIRE DAMPER.	
WORKROOM (STORAGE AND SMALLER GARAGE)	118		SPRINKLER HEAD RECONNECTION TO GLYCOL-FILLED, ANTI-FREEZE SPRINKLER ZONE.
CIRC SERVICES MANAGER'S OFFICE, TECHL SERVICES MANAGER'S OFFICE & CONFERENCE ROOM	108J, 108N, 108O	DISCONNECT & REMOVE SUPPLY DIFFUSER AND RETURN GRILLE IN PROJECT AREA	
		NEW COOLING-ONLY VAV BOX CONNECTED TO SUPPLY MAIN AND THREE NEW CEILING DIFFUSERS AND THREE NEW RETURN GRILLES	
		THREE NEW CEILING DIFFUSERS AND THREE NEW RETURN DIFFUSERS	
		REBALANCE VAV BOX AND CEILING DIFFUSERS	
CIRC SERVICES MANAGER'S OFFICE, TECHL SERVICES MANAGER'S OFFICE & CONFERENCE ROOM	108J, 108N, 108O		SPRINKLER HEAD RELOCATION
CIRCULATION WORKROOM	108	ADD 4 SQ. FT. RETURN OPENING ABOVE CEILING BETWEEN CIRC WORKRM AND SORTING ROOM	
		REBALANCE VAV BOX AND CEILING DIFFUSERS	
GENERAL BUILDING STORAGE	110	RE-BALANCE EXISTING SUPPLY REGISTERS AND DIFFUSERS ON VAV BOX ZONE.	
GENERAL BUILDING STORAGE	110		SPRINKLER HEAD RELOCATION
	ROOM NO.	MECHANICAL	PLUMBING & FIRE PROTECTION
SECOND FLOOR PHASE 1			
FAMILY TOILET	203E	RE-BALANCE EXISTING EXHAUST REGISTER	
			REMOVE LAVATORY SINK & FAUCET (TURN-OVER TO LIBRARY) W/ PIPING & CARRIERS
			TWO NEW LAVATORY SINKS & FAUCETS (FURNISHED BY LIBRARY)
			ONE NEW WATER CLOSET & FLUSH VALVE (FURNISHED BY LIBRARY)
SECOND FLOOR PHASE 2			
	MECHANICAL SCOPE OF WORK MASTER PLAN PHASES 1 AND 2		
	ROOM NO.	MECHANICAL	PLUMBING & FIRE PROTECTION
THIRD FLOOR PHASE 1			
THIRD FLOOR PHASE 2			
ROTARY HERITAGE READING ROOM (FORMER TEEN STUDY LOUNGE)	302E	N/A	N/A
STUDY ROOM (THE COMMONS) (FORMER ROTARY HERITAGE READING ROOM)	303	DISCONNECT & REMOVE SUPPLY DIFFUSERS AND RETURN GRILLES IN PROJECT AREA	
		NEW COOLING-ONLY VAV BOX CONNECTED TO SUPPLY MAIN AND FIVE NEW CEILING DIFFUSERS AND TWO NEW RETURN GRILLES	
		FIVE NEW CEILING DIFFUSERS AND TWO NEW RETURN DIFFUSERS	
		REBALANCE VAV BOXES AND CEILING DIFFUSERS	
		NEW EXHAUST FAN, INLET AND DISCHARGE DUCTWORK, CONTROLS FOR FUTURE LOCAL VENTILATION SYSTEM;	
		ON ROOF, NEW EXHAUST GOOSENECK WITH CURB ADAPTER REPLACING EXISTING EXHAUST FAN	
STUDY ROOM (TEEN LOUNGE) (FORMER ROTARY HERITAGE READING ROOM)	303		SPRINKLER HEAD RELOCATION
			ONE NEW STAFF SINK
STAFF OFFICE (ADULT SERVICES WORKROOM)	306	INSTALL AND REBALANCE NEW PRIVATE OFFICE CEILING DIFFUSER & RETURN DIFFUSER	
		DISCONNECT AND REMOVE EXHAUST HOOD AND CONTROLS FOR RE-INSTALLATION	
STAFF OFFICE (ADULT SERVICES WORKROOM)	306		SPRINKLER HEAD RELOCATION
			ONE NEW STAFF SINK
STAFF OFFICE (CREATIVE SERVICES)	304	INSTALL RE-LOCATED EXHAUST HOOD AND CONTROLS WITH NEW DUCTWORK.	
		RELOCATE RETURN DIFFUSER	
		REBALANCE EXISTING CEILING DIFFUSERS	
STAFF OFFICE (CREATIVE SERVICES)	304		ONE NEW STAFF SINK
	ROOM NO.	MECHANICAL	PLUMBING & FIRE PROTECTION
FOURTH FLOOR PHASE 1			
ADULT FORUM, COMPUTER AREA	401Z	NEW COOLING-ONLY VAV BOX CONNECTED TO SUPPLY MAIN AND DISTRIBUTION DUCTWORK	
		FOUR RELOCATED CEILING DIFFUSERS WITH NEW BRANCH DUCTWORK AND ONE NEW RETURN DIFFUSER	
		DISCONNECT AND REMOVE FIVE CEILING DIFFUSERS FROM EXISTING VAV BOX AND RELOCATE ONE CEILING DIFFUSER	
ADULT FORUM, COMPUTER AREA	401Z		SPRINKLER HEAD RELOCATION
FOURTH FLOOR PHASE 2			
WORKROOM (REFERENCE STORAGE/READER'S SERVICES)	406	REBALANCE VAV BOX AND CEILING DIFFUSERS	
IT WORKROOM (FORMER COMPUTER LAB)	403	REBALANCE FP BOX AND CEILING DIFFUSERS	N/A

ARCHITECTURE PLANNING INTERIORS

LOHAN ANDERSON

DES PLAINES PUBLIC LIBRARY, OWNER
1501 ELLINWOOD ST., DES PLAINES, IL 60016

LOHAN ANDERSON, ARCH./INT.
401 N. MICHIGAN AVE., CHICAGO, IL 60611

CALOR DESIGN GROUP, LTD., MEP/FP
2217 N. WESTERN AVE., CHICAGO, IL 60647

C. S. ASSOCIATES, INC., STRUC.
4532 W. 103RD ST., OAK LAWN, IL 60453

N

REV.	DATE	ISSUE
	8-14-15	ISSUE FOR BID AND PERMIT

DATE SIGNED:

Des Plaines Public Library
Phased Improvements

PROJECT NUMBER: 13300

MECHANICAL SCHEDULES

M2.1

VARIABLE AIR VOLUME(VAV) BOX DETAIL

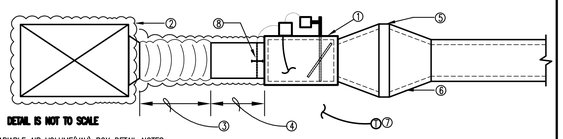

DETAIL IS NOT TO SCALE

VARIABLE AIR VOLUME(VAV) BOX DETAIL NOTES

1. Single-duct, variable air volume(VAV), terminal unit with variable volume regulation, with high-pressure, round, duct inlet, thermally and acoustically insulated(minimum 1" thick, 1-1/2 lbs. fiberglass) Min. 22 gauge casing, VAV box actuator and controller and low-pressure outlet.
2. Primary supply ductwork, with 1" fiber glass, insulation and vapor barrier.
3. Maximum of 3 feet length of high pressure, NFPA and UL approved materials, flexible ductwork, with 1" fiber glass insulation, vapor barrier and with same size as VAV box inlet diameter, with conical tee take-off.
4. High pressure, spiral round cold air primary supply ductwork, minimum of 2 times inlet diameter, same size of VAV box.
5. Reheat coil(if applicable), steam, electric or hot water, with interlocked controls.
6. Low pressure, lined outlet ductwork, minimum of 20 feet length of downstream of VAV box.
7. Zone thermostat, mount at return air inlet, 5'-0" above finished floor, interlocked with perimeter heating control as required.
8. Inlet air pressure sensor connected to VAV box controller.

IN LINE EXHAUST FAN DETAIL

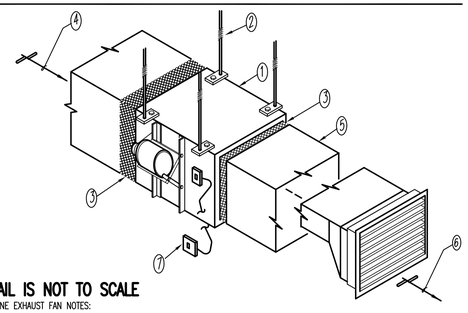

DETAIL IS NOT TO SCALE

IN-LINE EXHAUST FAN NOTES:

1. IN-LINE EXHAUST FAN; MODIFY LAYOUT FOR VERTICAL OR OTHER TYPE OF FAN ARRANGEMENT AND/OR DUCT CONNECTIONS. IN-LINE FANS ARE EITHER DIRECT-DRIVE OR BELT-DRIVE AS SPEFICIED AND ARE U.L. LISTING.
2. MOUNT IN-LINE EXHAUST FAN IN AT LEAST 4 POINTS AND WITH VIBRATION ISOLATION MOUNTS.
3. PROVIDE FLEXIBLE DUCT CONNECTIONS AT DUCT INLET AND OUTLET.
4. IN-LINE FAN INLET WITH FULL CROSSECTION, DUCTED CONNECTION; DUCTWORK TO MATCH FIELD CONDITIONS; LINED DUCTWORK ON INLET DUCTWORK, FOR MINIMUM OF 20 FEET OR AS OTHERWISE SPECIFIED.
5. OUTLET DUCTWORK TO MATCH FIELD CONDITIONS; HORIZONTAL OR VERTICAL, RECTANGULAR OR ROUND DUCT FITTINGS.
6. EXHAUST DISCHARGE SHALL HAVE A GRAVITY AND/OR ELECTRIC BACKDRAFT DAMPER AND BIRDSCREEN AT EXTERIOR OUTLET; DISCHARGE SHALL BE THROUGH A LOUVER, WEATHERPROOF TYPE, MOUNTED FLUSH TO EXTERIOR SURFACE ONE OR MULTIPLY DUCT CONNECTIONS, PROVIDE INSULATED BLANK-OFF OF UNUSED PORTIONS OF THE LOUVER OUTLET.
7. PROVIDE EXHAUST FAN MOUNTED CODE DISCONNECT SWITCH; CONNECTED TO REMOTED CONTROL SWITCH AS SPECIFIED OR AS IS REQUIRED BY ACTUAL APPLICATION; LOCAL FAN CONTROL MOUNTED NEAR EXHAUST INLET SHALL BE BY ONE OF THE FOLLOWING METHODS:
   a. SEPARATE, LOCAL ON/OFF SWITCH WITH PILOT LIGHT.
   b. SOLID STATE, ON/OFF SPEED CONTROL.
   c. 120 VOLT THERMOSTAT, AND/OR HUMIDISTAT WITH ADJUSTABLE SET POINT ON APPROXIMATELY 85F AND/OR 50% RH.
   d. INTERLOCK WITH HVAC UNIT.
8. PROVIDE ACCESS PANEL AS REQUIRED FOR SERVICING WITH CLEARANCES FOR THE FAN MOTOR & ELECTRICAL CONNECTIONS.
9. ALL FANS SHALL BE 120 VOLT, SINGLE PHASE UNLESS NOTED OTHRWISED. ALL FANS & CONTROL DEVICES SHALL BE FURNISHED AND INSTALLED BY THE MECHANICAL CONTRACTOR. ALL POWER WIRING IS BY ELECTRICAL CONTRACTOR.

FIRE DAMPER DETAIL

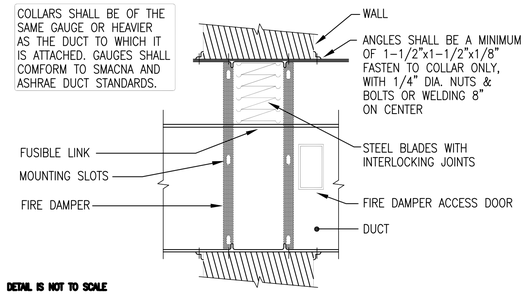

DETAIL IS NOT TO SCALE

REHEAT COIL PIPING DIAGRAM(2-WAY VALVE)

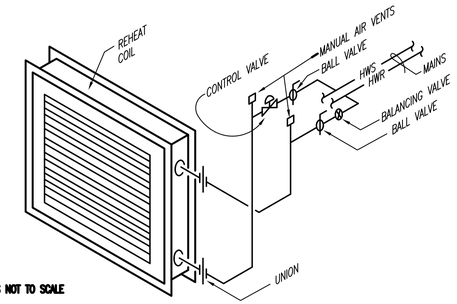

DETAIL IS NOT TO SCALE

DUCTWORK DETAILS

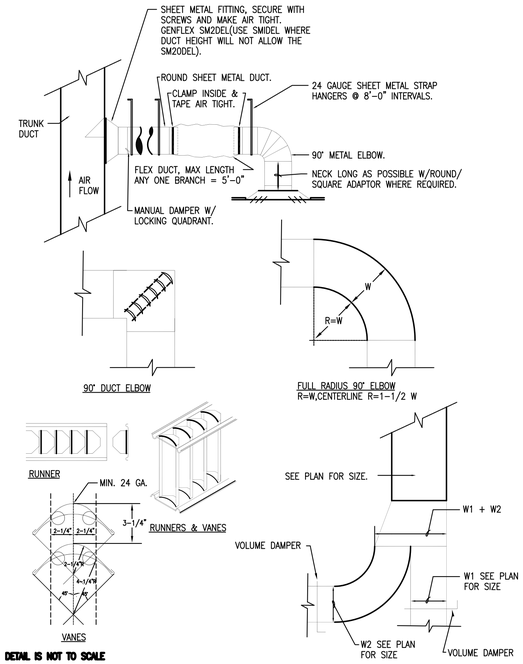

DETAIL IS NOT TO SCALE

MECHANICAL SYMBOL LIST

NOTE: NOT ALL SYMBOLS ARE APPLICABLE TO THIS PROJECT

PIPE FITTINGS

- GATE VALVE ON VERTICAL PIPE
- STRAINER
- DIRECTION OF FLOW
- GATE VALVE
- GLOBE VALVE
- CHECK VALVE
- MANUAL AIR VENT
- PRESSURE GAUGE COCK
- B & G CIRCUIT SETTER OR NATURAL GAS COCK
- PRESSURE AND/OR, TEMPERATURE RELIEF VALVE
- AUTOMATIC AIR VENT
- PITCH DOWN IN DIRECTION OF FLOW
- RISER (ELBOW) DOWN
- CONCENTRIC REDUCER
- ECCENTRIC REDUCER, (FLAT SIDE UP OR DOWN)
- PLUGGED TEE
- CAPPED PIPE END
- RISER (TEE) DOWN
- RISER (ELBOW) UP
- RISER (TEE) UP
- UNION
- BALL VALVE
- BALANCING-TYPE BALL VALVE

PIPE SERVICE TAGS

CD	CONDENSATE DRAIN
LL	REFRIGERANT LIQUID LINE
G	NATURAL GAS
HWS	HOT WATER SUPPLY
HWR	HOT WATER RETURN
CHWS	CHILLED WATER SUPPLY
CHWR	CHILLED WATER RETURN

ABBREVIATIONS

ACD	ACCESS DOOR
AD	AUTOMATIC DAMPER
AFF	ABOVE FINISHED FLOOR
BI	BLACK IRON
BO	BLANK OFF
BS	BIRD SCREEN
CFM	CUBIC FEET PER MINUTE
CFM-E	CUBIC FEET PER MINUTE-EXHAUST
CFM-ER	CUBIC FEET PER MINUTE-EXHAUST/RETURN
CFM-R	CUBIC FEET PER MINUTE-RETURN
CFM-S	CUBIC FEET PER MINUTE-SUPPLY
DIFF	DIFFUSER
DN	DOWN
EA	EACH
EA EXH	EXHAUST AIR
FAI	FRESH AIR INTAKE
FBO	FURNISHED BY OTHERS
FD	FIRE DAMPER
GA	GAUGE
GBD	GRAVITY BACKDRAFT DAMPER
GC	GENERAL CONTRACTOR
GR	GRILLE
MD	MANUAL DAMPER
NIC	NOT IN CONTRACT
NK	NECK
OA	OUTSIDE AIR
OAI	OUTSIDE AIR INTAKE
PP	PATCH PLATE
RA/RET	RETURN AIR
RAD	RADIATION
REG	REGISTER
SA/SUP	SUPPLY AIR
TC	TEMPERATURE CONTROL
TYP	TYPICAL
VIF	VERIFY IN FIELD

VENTILATION

- FLEXIBLE DUCT
- FLEXIBLE DUCT CONNECTION
- TURNING VANES IN ELBOW
- SUPPLY DIFFUSER, REGISTER OR GRILLE
- RETURN AND/OR EXHAUST REGISTER OR GRILLE
- U.C. UNDERCUT
- D.G. DOOR GRILLE
- EXHAUST AND/OR RETURN DUCT UP
- EXHAUST AND/OR RETURN DUCT DOWN
- SUPPLY DUCT UP
- SUPPLY DUCT DOWN
- OUTSIDE (FRESH) AIR INTAKE DUCT UP
- OUTSIDE (FRESH) AIR INTAKE DUCT DOWN
- HUMIDISTAT, HUMIDITY SENSOR
- THERMOSTAT, TEMPERATURE SENSOR

DES PLAINES PUBLIC LIBRARY, OWNER
1501 ELLINWOOD ST., DES PLAINES, IL 60016

LOHAN ANDERSON, ARCH./INT.
401 N. MICHIGAN AVE., CHICAGO, IL 60611

CALOR DESIGN GROUP, LTD., MEP/FP
2217 N. WESTERN AVE., CHICAGO, IL 60647

C. S. ASSOCIATES, INC., STRUC.
4532 W. 103RD ST., OAK LAWN, IL 60453

N

REV.	DATE	ISSUE
	8-14-15	ISSUE FOR BID AND PERMIT

DATE SIGNED:

Des Plaines Public Library
Phased Improvements

PROJECT NUMBER: 13300

MECHANICAL DETAILS

M3.1

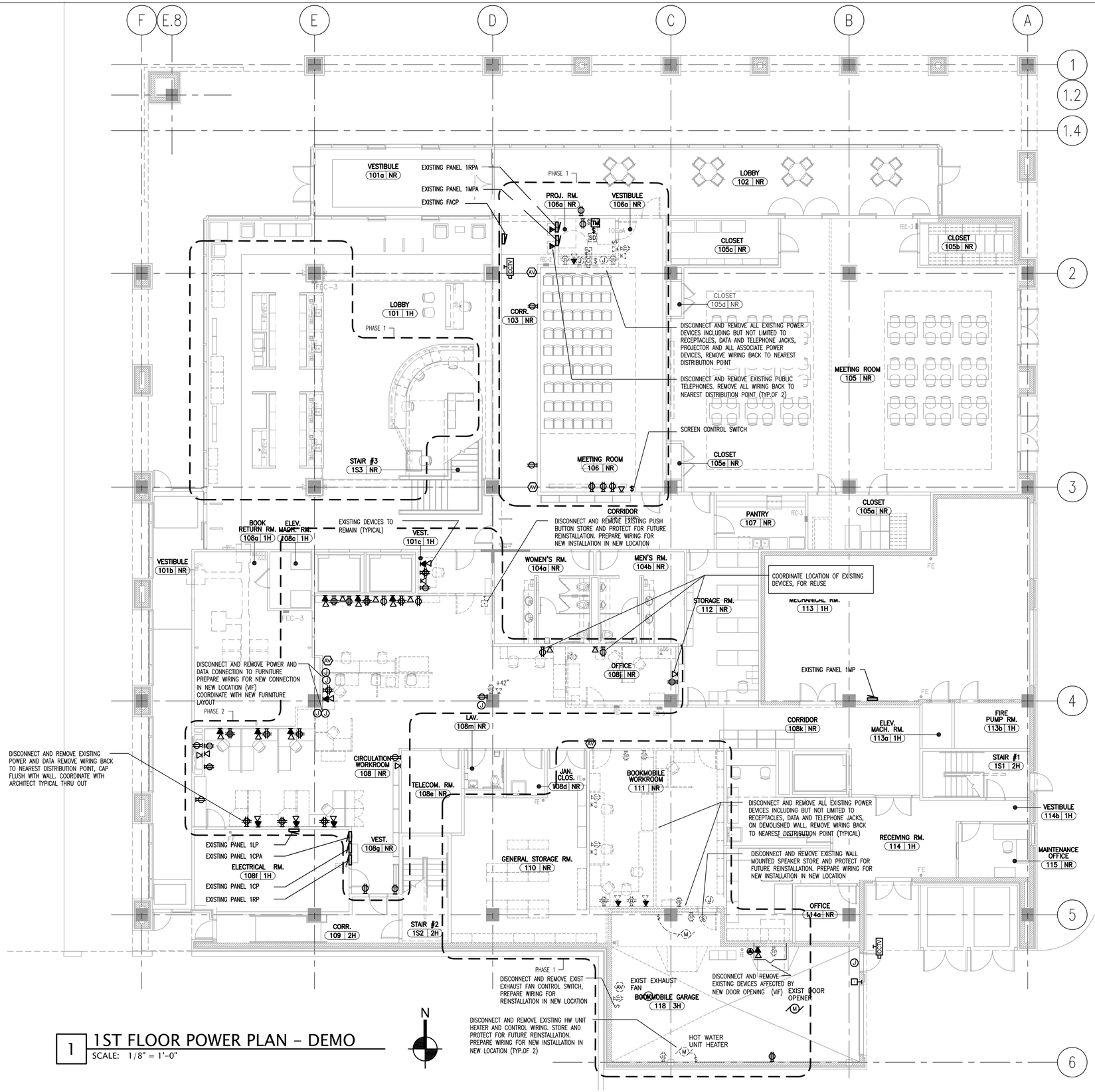

1 1ST FLOOR POWER PLAN - DEMO
SCALE: 1/8" = 1'-0"

ARCHITECTURE PLANNING INTERIORS
LOHAN ANDERSON

DES PLAINES PUBLIC LIBRARY, OWNER
1501 ELLINWOOD ST., DES PLAINES, IL 60016

LOHAN ANDERSON, ARCH./INT.
401 N. MICHIGAN AVE., CHICAGO, IL 60611

CALOR DESIGN GROUP, LTD., MEP/FP
2217 N. WESTERN AVE., CHICAGO, IL 60647

C. S. ASSOCIATES, INC., STRUC.
4532 W. 103RD ST., OAK LAWN, IL 60453

ELECTRICAL SCOPE OF WORK

	DES PLAINES PUBLIC LIBRARY	**POWER DISTRIBUTION**
	SCOPE ITEM	**DESCRIPTION**
1	POWER PANELBOARDS, RPRPA SERIES 120/208 VOLT, 3 PHASE	VERIFY THE EXISTING LOADING BY MONITOR PEAK AMP DRAW IN EACH PANEL., VERIFY THE EXISTING CIRCUITS CONNECTIONS FOR EXISTING PANELBOARDS SERVING RECEPTACLE AND EQUIPMENT POWER REQUIREMENTS. VERIFY AND DOCUMENT THE EXISTING PANELBOARD SCHEDULES FOR ACCURACY.
2	COMPUTER POWER PANELBOARDS, CRCPA SERIES 120/208 VOLT, 3 PHASE	VERIFY THE EXISTING LOADING BY MONITOR PEAK AMP DRAW IN EACH PANEL., VERIFY THE EXISTING CIRCUITS CONNECTIONS FOR EXISTING PANELBOARDS SERVING RECEPTACLE AND EQUIPMENT POWER REQUIREMENTS. VERIFY AND DOCUMENT THE EXISTING PANELBOARD SCHEDULES FOR ACCURACY.
3	POWER OUTLETS	PROVIDE NEW AND RE-USE EXISTING POWER OUTLETS THROUGHOUT THE PROJECT AREA. NEW WALL (LOW, COUNTERTOP, HIGH), FLUSH FLOOR AND FLUSH CEILING MOUNTED DUPLEX & FOUR PLEX RECEPTACLES SHALL BE PROVIDED. THESE RECEPTACLES ARE TO BE CONNECTED TO THE EXISTING POWER PANELBOARD(S) SERVING THE PROJECT AREAS. REBALANCE EXISTING PANELBOARD(S) TO PROVIDE SUFFICIENT CIRCUITS FOR NEW WORK.
4	POWER RACEWAY AND CONDUCTORS.	PROVIDE NEW , RE-USE TAP, AND EXTEND EXISTING RACEWAY AND CONDUCTORS FOR STANDARD POWER RECEPTACLES, EQUIPMENT AND DEVICE CONNECTIONS INCLUDING AS WELL AS ALL OTHER POWER REQUIREMENTS THROUGHOUT THE PROJECT AREA. ALL RACEWAY SHALL BE RUN CONCEALED IN THE WALLS, IN THE CEILING ABOVE OR BELOW THE PROJECT AREA. PROVIDE NEW FLOOR, WALL AND CEILING PENETRATIONS AND PROPER FIRE STOP WHEN COMPLETED. ALL ABANDONED DEVICES AND OUTLETS MUST BE COMPLETELY REMOVED. ALL WIRING MUST BE REMOVED AND PROPERLY DISCONNECTED AT THE SOURCE. REMOVE ALL ABANDONED RACEWAY AND BOXES AND FIRE-SAFE ALL OPENINGS. PROVIDE FLUSH BLANK OFF.
5	POWER DISTRIBUTION	CONNECT TO EXISTING POWER DISTRIBUTION SERVING THE PROJECT AREA. TEST AND DOCUMENT THE LOADS AND OUTLETS ON ALL CIRCUITS SERVING THE PROJECT AREA. ADD NEW AND RELOCATE EXISTING CIRCUITS TO BALANCE THE ELECTRICAL FOR THE PROJECT. A NEW CIRCUIT 20 AMP CIRCUIT SHALL BE PROVIDED FOR EACH ADDITION SIX TO EIGHT CONVENIENCE POWER RECEPTACLES. SPECIALTY LOADS (COPY MACHINES, VENDING MACHINES, ETC.) SHALL HAVE THEIR OWN DEDICATED CIRCUITS. LABEL AND PROVIDE AS-BUILT CONDITIONS FOR ALL EXISTING AND ALL NEW WORK IN THE PROJECT AREAS.
6	FLOOR POWER AND DATA OUTLETS	PROVIDE NEW WALKER/WIREMOLD/LEGRAND (OR EQUAL MATCHING) FLUSH FLOOR OUTLETS AS SHOWN THROUGH OUT THE PROJECT AREA. PROVIDE NEW CONNECTIONS FOR CONVENIENCE POWER, DATA AND VOICE/TELEPHONE OUTLETS SHALL **MATCH EXACTLY THE EXISTING OUTLETS.** WALKERDUCT PRO-SERIES OR EQUAL MATCHING SERVICE FITTINGS WITH TWO PORTS IN FLUSH METALLIC COVER; WIREMOLD SOURCE 1 SERIES OR EQUAL MATCHING WITH POKE-THROUGH ACCESS; WALKERDUCT PRO-SERIES OR EQUAL MATCHING SERVICE FITTINGS WITH TWO OR THREE METAL FLEXIBLE CONDUITS IN FLUSH METALLIC COVER FOR FURNITURE CONNECTION.
7	MONITOR AND A.V. DISPLAYS	CONNECT POWER, DATA AND OTHER WIRING TO ALL NEW AND RELOCATED EXISTING EQUIPMENT. INCLUDE CONNECTIONS FOR NEW AND/OR RELOCATED PASSIVE SCREENS AND ACTIVE MONITORS AND ALL ASSOCIATED CONTROLS, ETC. VERIFY ALL EQUIPMENT REQUIREMENTS BEFORE PRICING AND BEFORE ANY INSTALLATION WORK. PLACE PROJECTION EQUIPMENT SWITCHES NEAR LIGHT SWITCHES OR IN OTHER LOCATIONS AS DIRECTED BY THE ARCHITECT.
		LIGHTING AND CONTROLS
	SCOPE ITEM	**DESCRIPTION**
1	LIGHTING PANELBOARDS, LP SERIES 277/480 VOLT, 3 PHASE	VERIFY THE EXISTING LOADING BY MONITOR PEAK AMP DRAW IN EACH PANEL., VERIFY THE EXISTING CIRCUITS CONNECTIONS FOR EXISTING PANELBOARDS SERVING LIGHTING POWER AND RELAY CONTROL REQUIREMENTS. VERIFY AND DOCUMENT THE EXISTING PANELBOARD SCHEDULES FOR ACCURACY.
2	LIGHTING FIXTURES – NEW, RELOCATED & EXISTING	PROVIDE A LIGHT FIXTURE LAYOUT PER THE ARCHITECTURAL AND ELECTRICAL DRAWINGS, USING EXISTING, RELOCATED (AND REPAIR AS NECESSARY), NEW MATCHING AND NEW SPECIFIED FIXTURES. VERIFY EXISTING FIXTURE AND NEW ACCESSORIES TO MATCH. CLEAN AND RE-LAMP ALL NEW AND EXISTING FIXTURES.
3	LIGHTING RACEWAY AND CONDUCTORS	PROVIDE NEW AND RE-USE EXISTING RACEWAY AND CONDUCTORS FOR ALL LIGHTING FIXTURES, LIGHTING CONTROLS AND OTHER LIGHTING DEVICE CONNECTIONS THROUGHOUT THE PROJECT AREA. ALL RACEWAY SHALL BE RUN CONCEALED IN THE WALLS, IN THE CEILING ABOVE OR BELOW THE PROJECT AREA. PROVIDE NEW FLOOR, WALL AND CEILING PENETRATIONS AND PROPER FIRE STOP WHEN COMPLETED. PROVIDE NEW JUNCTION AND PULL BOXES TO ACCOMMODATE NEW AND EXISTING WIRING. ALL ABANDONED DEVICES AND FIXTURES MUST BE COMPLETELY REMOVED AND TURN-OVER TO THE OWNER IF REQUESTED. ALL WIRING MUST BE REMOVED AND PROPERLY DISCONNECTED AT THE SOURCE. REMOVE ALL ABANDONED RACEWAY AND BOXES AND FIRE-SAFE ALL OPENINGS.
4	LIGHTING POWER DISTRIBUTION	CONNECT TO EXISTING LIGHTING DISTRIBUTION SERVING THE PROJECT AREA. TEST AND DOCUMENT ALL CIRCUITS SERVING THE PROJECT AREA. ADD NEW AND RELOCATE EXISTING CIRCUITS TO BALANCE THE ELECTRICAL FOR THE PROJECT. LABEL AND PROVIDE AS-BUILT CONDITIONS FOR ALL EXISTING ALL AND NEW WORK IN THE PROJECT AREA.
5	LIGHTING CONTROLS - LOCAL	RETAIN EXISTING, RE-WORK EXISTING AND PROVIDE NEW LOCAL LIGHTING CONTROLS. PROVIDE OWNER-STANDARD RELAY-BASED LIGHTING CONTROL SYSTEM DISTRIBUTED CONTROLS FOR SWITCHING, SETTINGS, AND OCCUPANCY SENSING. PROVIDE LOCAL ON/OFF, DIMMING AND OCCUPANCY CONTROLS PER THE DRAWINGS FOR ALL NEW SPACES AND AREAS. TEST AND DOCUMENT ALL EXISTING LIGHTING CONTROL DEVICES, RACEWAY AND CONDUCTORS SERVING THE PROJECT. RELOCATE CENTRAL CONTROLS AS REQUIREMENT PROGRAM AND WALL CHANGES AS SHOWN ON ARCHITECTURAL AND ELECTRICAL DRAWINGS.
6	EMERGENCY LIGHTING	RETAIN BATTERY-BACKUP EMERGENCY LIGHTING WITH SECONDARY BATTERY POWER SOURCE. THESE FIXTURES HAVE A LAMP WITH NORMAL POWER AND INTREGAL BATTERY BACK-UP AND SERVES AS A NIGHT LIGHT. ADD NEW DUEL-POWER SOURCE LIGHT FIXTURES AS NECESSARY TO MEET LOCAL CODE AUTHORITIES' REQUIREMENTS. EXISTING UNIT MOUNTED, BATTERY-BACK UP EMERGENCY LIGHTS SHALL REMAIN IS SERVICE. ADD NEW DUEL-POWER SOURCE LIGHT FIXTURES AND EMERGENCY ONLY LIGHT FIXTURES AS REQUIRED BY CODE OFFICIALS OR AS SHOWN OF THE DRAWINGS.
7	EXIT LIGHTS	RETAIN BATTERY-BACKUP EXIT LIGHTING. ADD NEW DUEL-POWER SOURCE EXIT LIGHT FIXTURES AS NECESSARY TO MEET LOCAL CODE AUTHORITIES' REQUIREMENTS AND AS NOTED. POWER EXIT LIGHTS FOR EXISTING EXIT LIGHTING CIRCUITS.
		COMMUNICATIONS
	SCOPE ITEM	DESCRIPTION
1	VOICE (TELEPHONE)/DATA OUTLETS	PROVIDE ALL NEW AND RETAIN ALL EXISTING VOICE/DATA OUTLETS AS SHOWN ON THE DRAWINGS AND AS REQUIRED BY OWNER-FURNISHED FURNITURE AND EQUIPMENT. ALL ABANDONED DEVICES AND OUTLETS MUST BE COMPLETELY REMOVED AND TURN-OVER TO THE OWNER IF REQUESTED. ALL WIRING MUST BE REMOVED AND PROPERLY DISCONNECTED AT THE SOURCE. REMOVE ALL ABANDONED RACEWAY AND BOXES AND FIRE-SAFE ALL OPENINGS.
2	VOICE (TELEPHONE)/DATA RACEWAY	PROVIDE NEW AND RE-USE EXISTING RACEWAY, WIRE/ CABLE-TRAY AND CONDUCTORS FOR ALL COMMUNICATION DEVICE CONNECTIONS THROUGHOUT THE PROJECT AREA. ALL RACEWAY SHALL BE RUN CONCEALED IN THE WALLS, IN THE CEILING ABOVE OR BELOW THE PROJECT AREA. PROVIDE NEW FLOOR, WALL AND CEILING PENETRATIONS AND PROPER FIRE STOP WHEN COMPLETED. PROVIDE NEW JUNCTION AND PULL BOXES TO ACCOMMODATE NEW AND EXISTING CONDUCTORS.
3	VOICE (TELEPHONE)/DATA IT TERMINATION	CONNECT TO EXISTING DISTRIBUTION FRAMES SERVING THE PROJECT AREA. TEST AND DOCUMENT ALL CONNECTORS SERVING THE PROJECT AREA. LABEL AND PROVIDE AS-BUILT CONDITIONS FOR ALL EXISTING ALL AND NEW WORK IN THE PROJECT AREA. **COORDINATE PATCH NUMBERING AND CONNECTION POINT LOCATION WITH OWNER. IN GENERAL FIRST AND SECOND COMMUNICATION CABLE SHALL BE TERMINATED IN THE 1ST FLOOR TELE-COM CLOSET, 108e AND THIRD AND FOURTH FLOOR COMMUNICATION CABLE SHALL BE TERMINATED IN THE FOURTH FLOOR COMPUTER CLOSET 404.**
4	VOICE (TELEPHONE)/DATA CONDUCTORS	ADD NEW OWNER STANDARD CABLING, DATA: CATEGORY 6 (CAT 6); VOICE (TELEPHONE): CATEGORY 6 (CAT 6); FROM ALL DEVICE OUTLETS, THROUGHOUT EXISTING AND NEW PULL BOXES TO IT ROOM TERMINATIONS. PUNCH-DOWN, TEST AND DOCUMENT ALL NEW AND EXISTING CABLING.
5	PUBLIC ADDRESS SYSTEM	RETAIN EXISTING SPEAKERS, RELOCATE AS NECESSARY FOR THE NEW WORK.
6	WIRELESS ACCESS POINTS (WAPs)	RETAIN AND RELOCATE AS NECESSARY WIRELESS ACCESS POINTS IN PROJECT AREA. PROVIDE NEW POWER AND DATA CONNECTIONS IN NEW LOCATIONS.
		LOW-VOLTAGE SYSTEMS
	SCOPE ITEM	DESCRIPTION
1	FIRE ALARM DEVICES	PROVIDE RELOCATE EXISTING AND RETAIN EXISTING FIRE ALARM DEVICES INCLUDING AUDIO-VISUAL SIGNALING DEVICES AND PROVIDE PROPER WIRING, RACEWAY AND CONNECTIONS TO THE EXISTING FIRE ALARM SYSTEM. PROPER COORDINATE WORK WILL OWNER. NEW, REMOVED AND REINSTALLED FIRE ALARM DEVICES INCLUDING AUDIO-VISUAL NOTIFICATION, ETC.
2	SECURITY DEVICES	PROVIDE NEW, AND RELOCATE EXISTING DOOR ACCESS DEVICES AND PROVIDE PROPER WIRING, RACEWAY AND CONNECTIONS. PROPER COORDINATE WORK WITH OWNER.

NOTES:
ELECTRICAL CONTRACTOR SHALL VERIFY ALL EXISTING CONDITIONS PRIOR TO DO ANY WORK
INCLUDING AND NOT LIMITED TO THE FOLLOWING;
- PANELBOARDS
  - AREA OF SERVICE
  - NUMBER OF SPARES AVAILABLE
  - NUMBER OF CIRCUITS AFFECTED WITHIN ARE OR WORK
- FURNITURE CONNECTION
- RECEPTACLES AFFECTED WITHIN AREA OF WORK

ELECTRICAL CONTRACTOR SHALL MAKE INACTIVE ALL UNUSED POWER / DATA RECEPTACLES CAP FLUSH WITH FLOOR OR WALL PER ARCHITECTS DIRECTIONS. REMOVE WIRING BACK TO NEAREST DISTRIBUTION POINT

COORDINATE ALL EXISTING POWER AND DATA LOCATION RECEPTACLES WITH NEW FURNITURE LAYOUT.

REV.	DATE	ISSUE
	8-14-15	ISSUE FOR BID AND PERMIT

DATE SIGNED:

Des Plaines Public Library
Phased Improvements

PROJECT NUMBER: 13300

1ST FLOOR POWER PLAN - DEMO

ED1.1

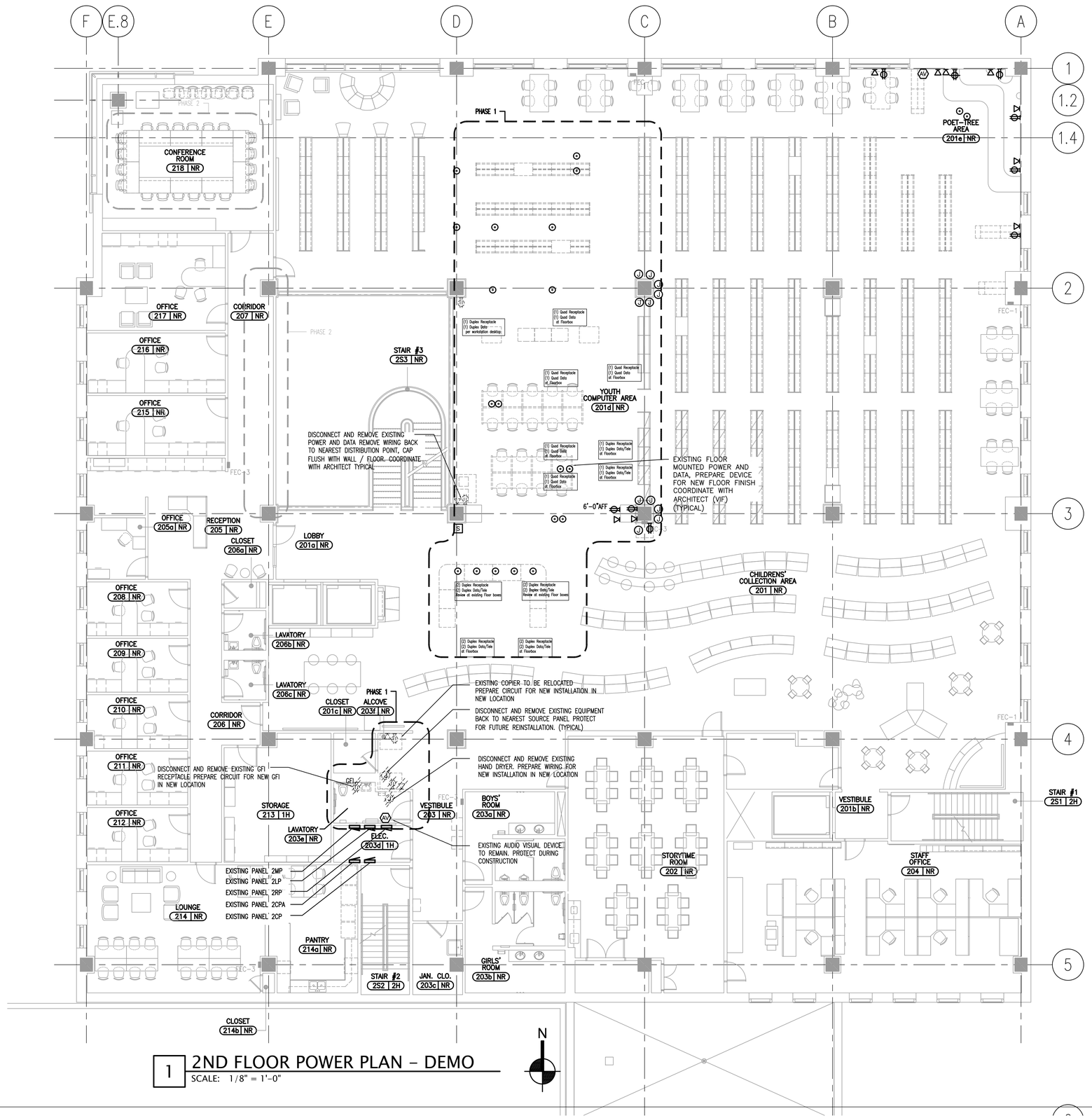

1 2ND FLOOR POWER PLAN - DEMO

SCALE: 1/8" = 1'-0"

ARCHITECTURE PLANNING INTERIORS

LOHAN ANDERSON

DES PLAINES PUBLIC LIBRARY, OWNER
1501 ELLINWOOD ST., DES PLAINES, IL 60016

LOHAN ANDERSON, ARCH./INT.
401 N. MICHIGAN AVE., CHICAGO, IL 60611

CALOR DESIGN GROUP, LTD., MEP/FP
2217 N. WESTERN AVE., CHICAGO, IL 60647

C. S. ASSOCIATES, INC., STRUC.
4532 W. 103RD ST., OAK LAWN, IL 60453

NOTES:
ELECTRICAL CONTRACTOR SHALL VERIFY ALL EXISTING CONDITIONS PRIOR TO DO ANY WORK
INCLUDING AND NOT LIMITED TO THE FOLLOWING;
- PANELBOARDS
  - AREA OF SERVICE
  - NUMBER OF SPARES AVAILABLE
  - NUMBER OF CIRCUITS AFFECTED WITHIN ARE OR WORK
- FURNITURE CONNECTION
- RECEPTACLES AFFECTED WITHIN AREA OF WORK

ELECTRICAL CONTRACTOR SHALL MAKE INACTIVE ALL UNUSED POWER / DATA RECEPTACLES CAP FLUSH WITH FLOOR OR WALL PER ARCHITECTS DIRECTIONS. REMOVE WIRING BACK TO NEAREST DISTRIBUTION POINT

COORDINATE ALL EXISTING POWER AND DATA LOCATION RECEPTACLES WITH NEW FURNITURE LAYOUT.

REV.	DATE	ISSUE
	8-14-15	ISSUE FOR BID AND PERMIT

DATE SIGNED:

Des Plaines Public Library
Phased Improvements

PROJECT NUMBER: 13300

2ND FLOOR POWER PLAN - DEMO

ED1.2

ARCHITECTURE PLANNING INTERIORS
LOHAN ANDERSON

DES PLAINES PUBLIC LIBRARY, OWNER
1501 ELLINWOOD ST., DES PLAINES, IL 60016

LOHAN ANDERSON, ARCH./INT.
401 N. MICHIGAN AVE., CHICAGO, IL 60611

CALOR DESIGN GROUP, LTD., MEP/FP
2217 N. WESTERN AVE., CHICAGO, IL 60647

C. S. ASSOCIATES, INC., STRUC.
4532 W. 103RD ST., OAK LAWN, IL 60453

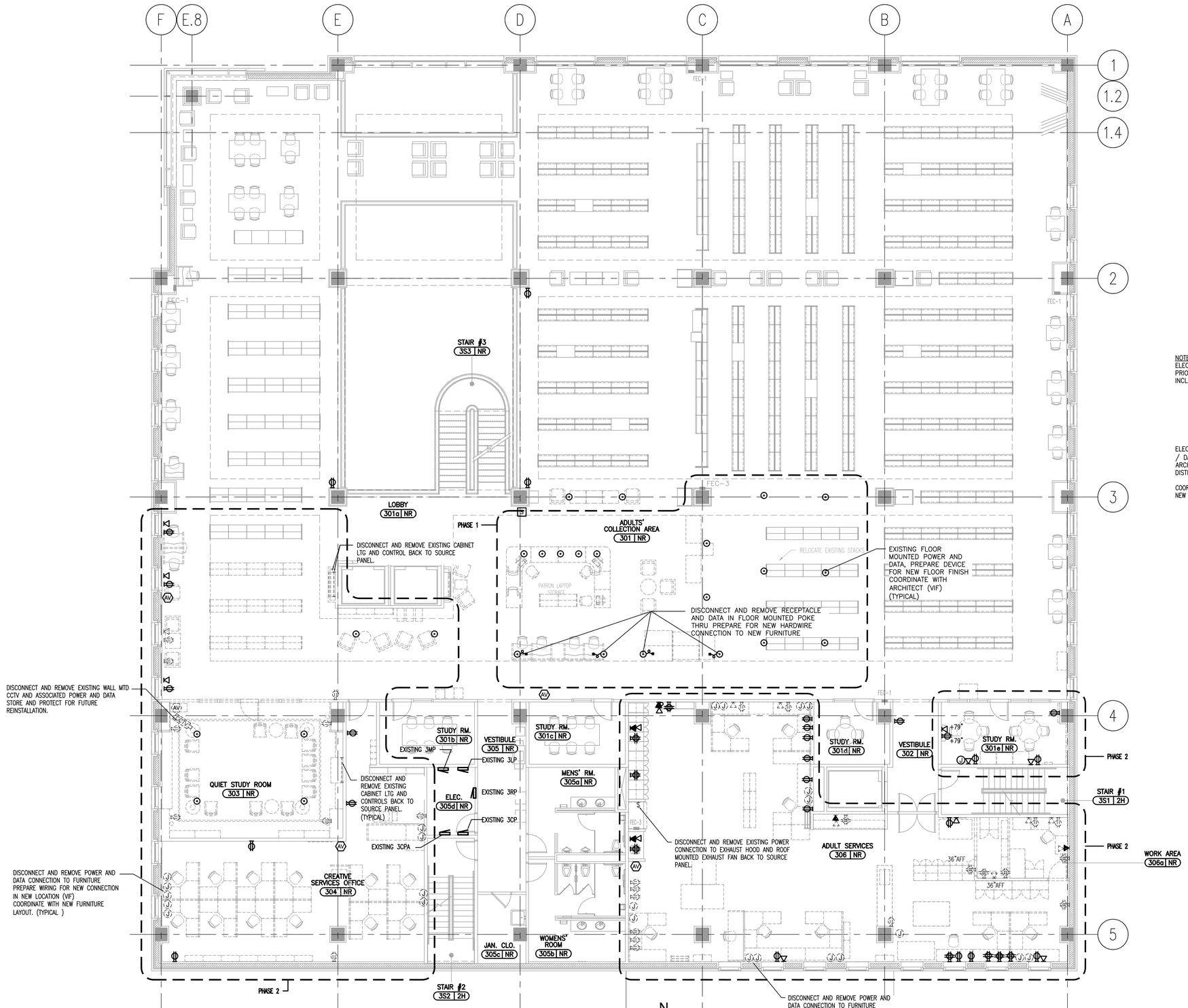

1 3RD FLOOR POWER PLAN - DEMO
SCALE: 1/8" = 1'-0"

NOTES:
ELECTRICAL CONTRACTOR SHALL VERIFY ALL EXISTING CONDITIONS PRIOR TO DO ANY WORK
INCLUDING AND NOT LIMITED TO THE FOLLOWING;
- PANELBOARDS
  - AREA OF SERVICE
  - NUMBER OF SPARES AVAILABLE
  - NUMBER OF CIRCUITS AFFECTED WITHIN ARE OR WORK
- FURNITURE CONNECTION
- RECEPTACLES AFFECTED WITHIN AREA OF WORK

ELECTRICAL CONTRACTOR SHALL MAKE INACTIVE ALL UNUSED POWER / DATA RECEPTACLES CAP FLUSH WITH FLOOR OR WALL PER ARCHITECTS DIRECTIONS. REMOVE WIRING BACK TO NEAREST DISTRIBUTION POINT

COORDINATE ALL EXISTING POWER AND DATA LOCATION RECEPTACLES WITH NEW FURNITURE LAYOUT.

REV.	DATE	ISSUE
	8-14-15	ISSUE FOR BID AND PERMIT

DATE SIGNED:

Des Plaines Public Library
Phased Improvements

PROJECT NUMBER: 13300

3RD FLOOR
POWER PLAN - DEMO

ED1.3

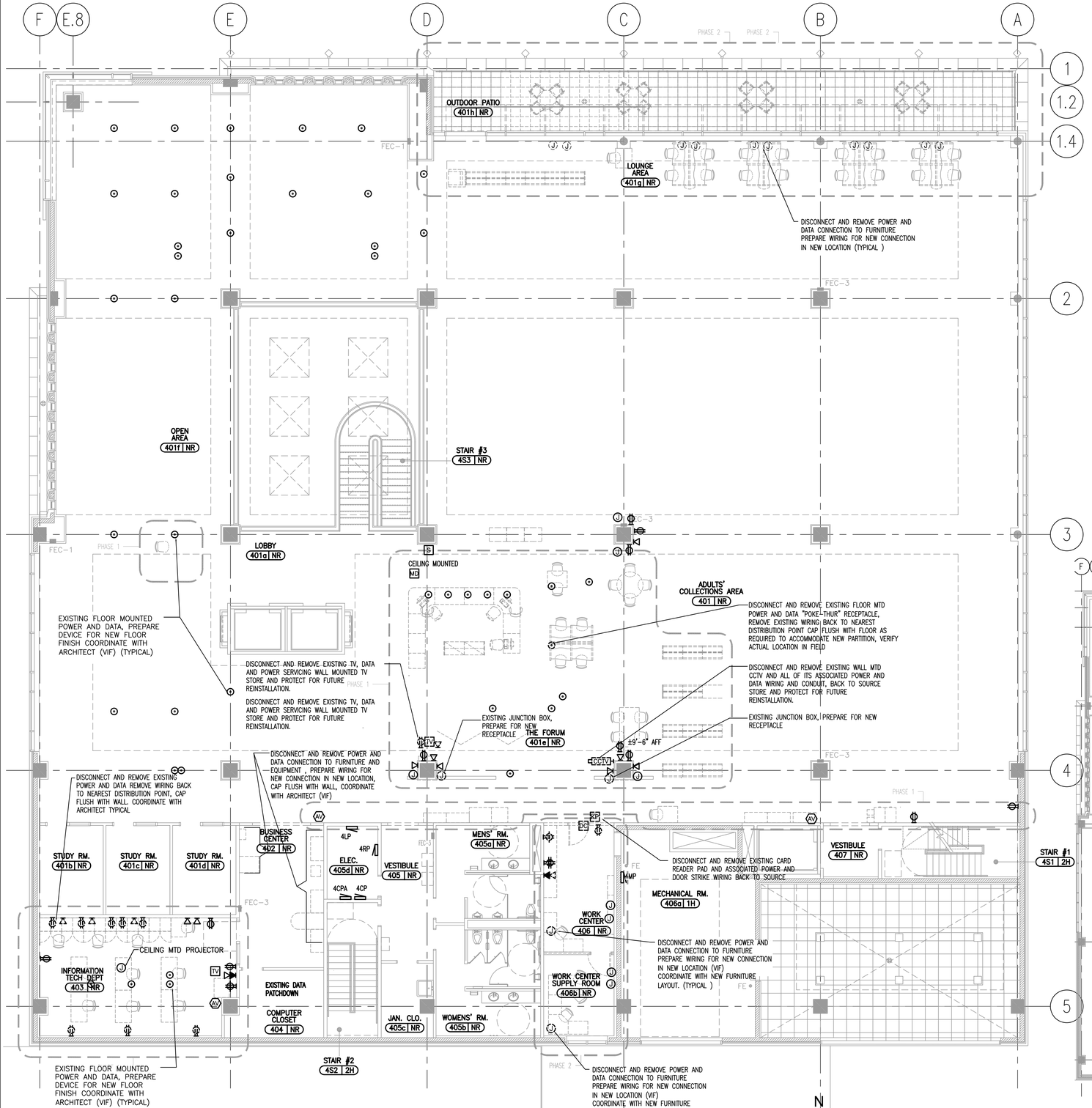

1 4TH FLOOR POWER PLAN - DEMO
SCALE: 1/8" = 1'-0"

NOTES:
ELECTRICAL CONTRACTOR SHALL VERIFY ALL EXISTING CONDITIONS PRIOR TO DO ANY WORK
INCLUDING AND NOT LIMITED TO THE FOLLOWING;
- PANELBOARDS
  - AREA OF SERVICE
  - NUMBER OF SPARES AVAILABLE
  - NUMBER OF CIRCUITS AFFECTED WITHIN ARE OR WORK
- FURNITURE CONNECTION
- RECEPTACLES AFFECTED WITHIN AREA OF WORK

ELECTRICAL CONTRACTOR SHALL MAKE INACTIVE ALL UNUSED POWER / DATA RECEPTACLES CAP FLUSH WITH FLOOR OR WALL PER ARCHITECTS DIRECTIONS. REMOVE WIRING BACK TO NEAREST DISTRIBUTION POINT

COORDINATE ALL EXISTING POWER AND DATA LOCATION RECEPTACLES WITH NEW FURNITURE LAYOUT.

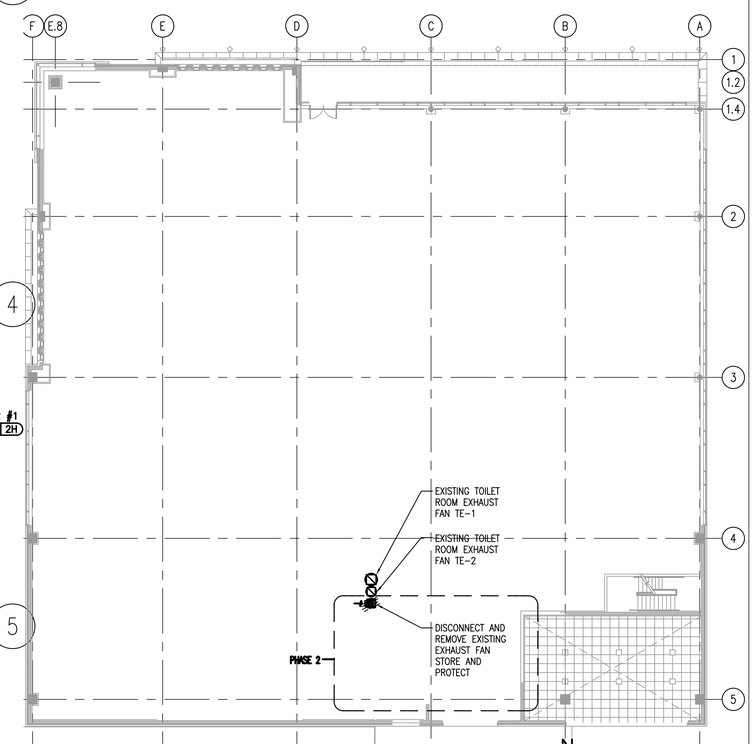

2 ROOF MECHANICAL PLAN - DEMO
SCALE: 1/16" = 1'-0"

ARCHITECTURE PLANNING INTERIORS
LOHAN ANDERSON

DES PLAINES PUBLIC LIBRARY, OWNER
1501 ELLINWOOD ST., DES PLAINES, IL 60016

LOHAN ANDERSON, ARCH./INT.
401 N. MICHIGAN AVE., CHICAGO, IL 60611

CALOR DESIGN GROUP, LTD., MEP/FP
2217 N. WESTERN AVE., CHICAGO, IL 60647

C. S. ASSOCIATES, INC., STRUC.
4532 W. 103RD ST., OAK LAWN, IL 60453

REV.	DATE	ISSUE
	8-14-15	ISSUE FOR BID AND PERMIT

DATE SIGNED:

Des Plaines Public Library
Phased Improvements

PROJECT NUMBER: 13300

4TH FLOOR
POWER PLAN - DEMO

ED1.4

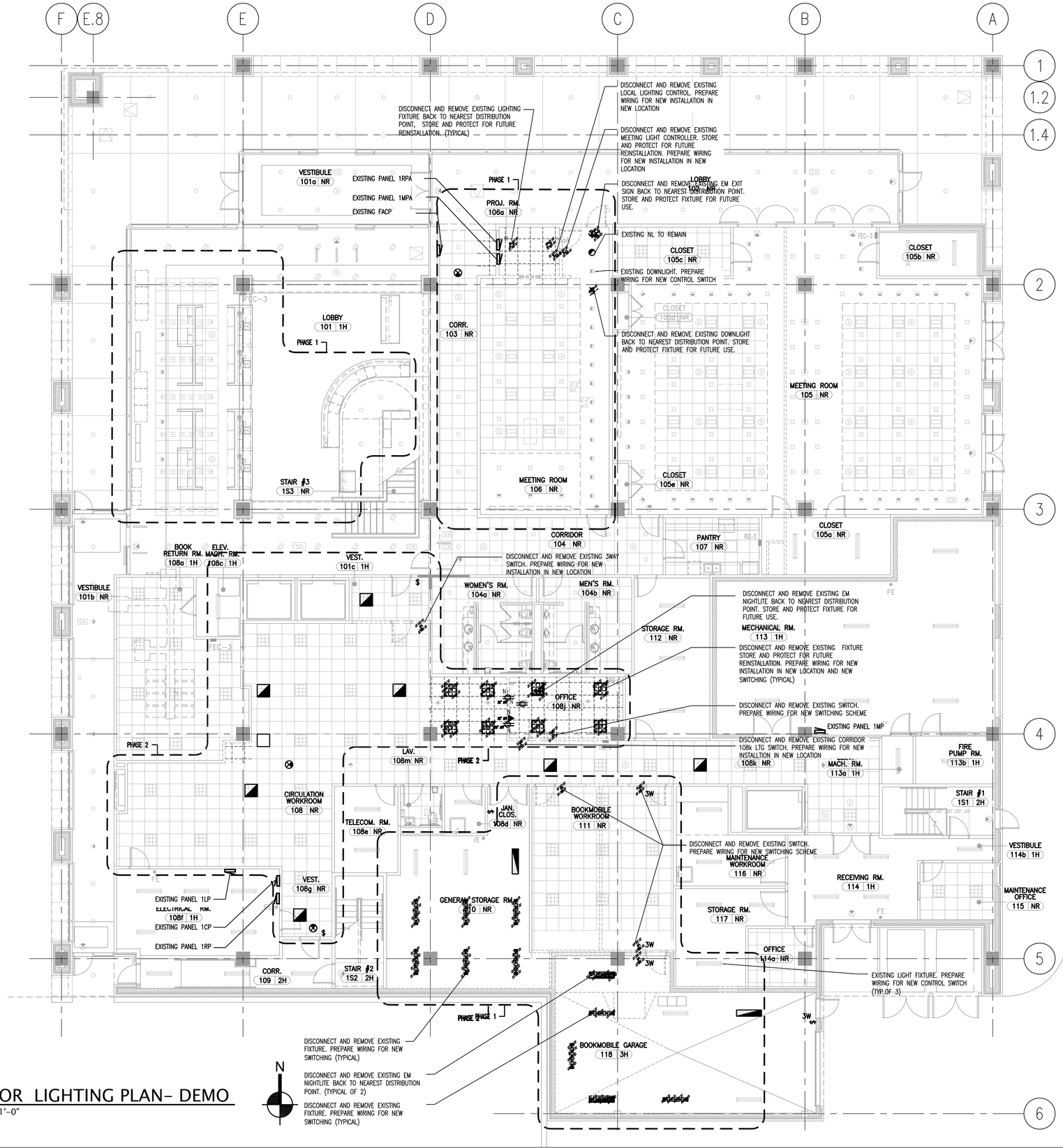

1 1ST FLOOR LIGHTING PLAN- DEMO
SCALE: 1/8" = 1'-0"

ARCHITECTURE PLANNING INTERIORS
LOHAN ANDERSON

DES PLAINES PUBLIC LIBRARY, OWNER
1501 ELLINWOOD ST., DES PLAINES, IL 60016

LOHAN ANDERSON, ARCH./INT.
401 N. MICHIGAN AVE., CHICAGO, IL 60611

CALOR DESIGN GROUP, LTD., MEP/FP
2217 N. WESTERN AVE., CHICAGO, IL 60647

C. S. ASSOCIATES, INC., STRUC.
4532 W. 103RD ST., OAK LAWN, IL 60453

REV.	DATE	ISSUE
	8-14-15	ISSUE FOR BID AND PERMIT

DATE SIGNED:

Des Plaines Public Library
Phased Improvements

PROJECT NUMBER: 13300

1ST FLOOR
LIGHTING PLAN
DEMO

ED2.1

ARCHITECTURE PLANNING INTERIORS
LOHAN ANDERSON

DES PLAINES PUBLIC LIBRARY, OWNER
1501 ELLINWOOD ST., DES PLAINES, IL 60016

LOHAN ANDERSON, ARCH./INT.
401 N. MICHIGAN AVE., CHICAGO, IL 60611

CALOR DESIGN GROUP, LTD., MEP/FP
2217 N. WESTERN AVE., CHICAGO, IL 60647

C. S. ASSOCIATES, INC., STRUC.
4532 W. 103RD ST., OAK LAWN, IL 60453

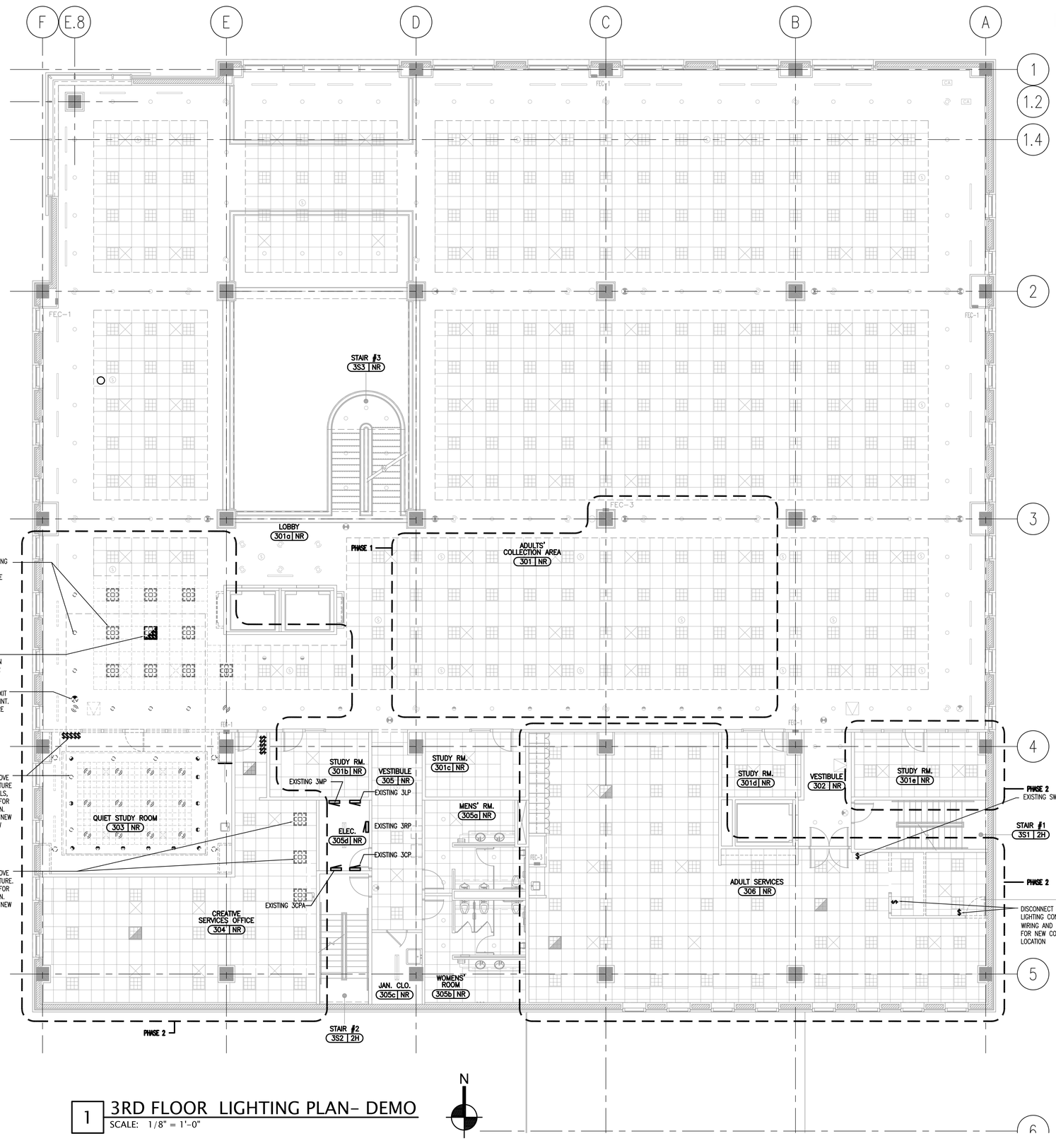

1 3RD FLOOR LIGHTING PLAN- DEMO
SCALE: 1/8" = 1'-0"

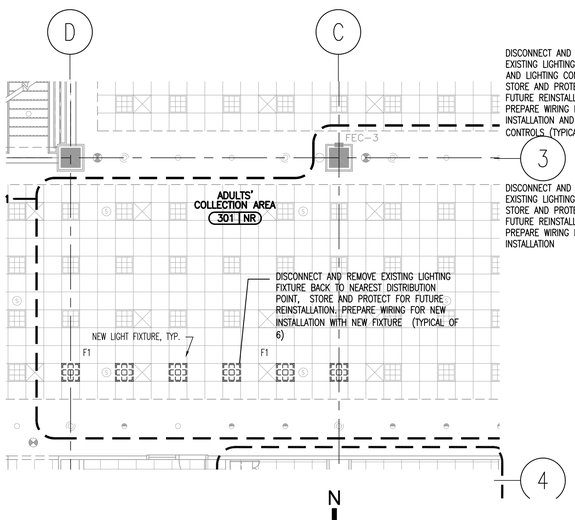

2 PLAN DETAIL ADD-ALT. #8
SCALE: 1/8" = 1'-0"

REV.	DATE	ISSUE
	8-14-15	ISSUE FOR BID AND PERMIT

DATE SIGNED:

Des Plaines Public Library
Phased Improvements

PROJECT NUMBER: 13300

3RD FLOOR
LIGHTING PLAN
DEMO

ED2.2

ARCHITECTURE PLANNING INTERIORS

LOHAN ANDERSON

DES PLAINES PUBLIC LIBRARY, OWNER
1501 ELLINWOOD ST., DES PLAINES, IL 60016

LOHAN ANDERSON, ARCH./INT.
401 N. MICHIGAN AVE., CHICAGO, IL 60611

CALOR DESIGN GROUP, LTD., MEP/FP
2217 N. WESTERN AVE., CHICAGO, IL 60647

C. S. ASSOCIATES, INC., STRUC.
4532 W. 103RD ST., OAK LAWN, IL 60453

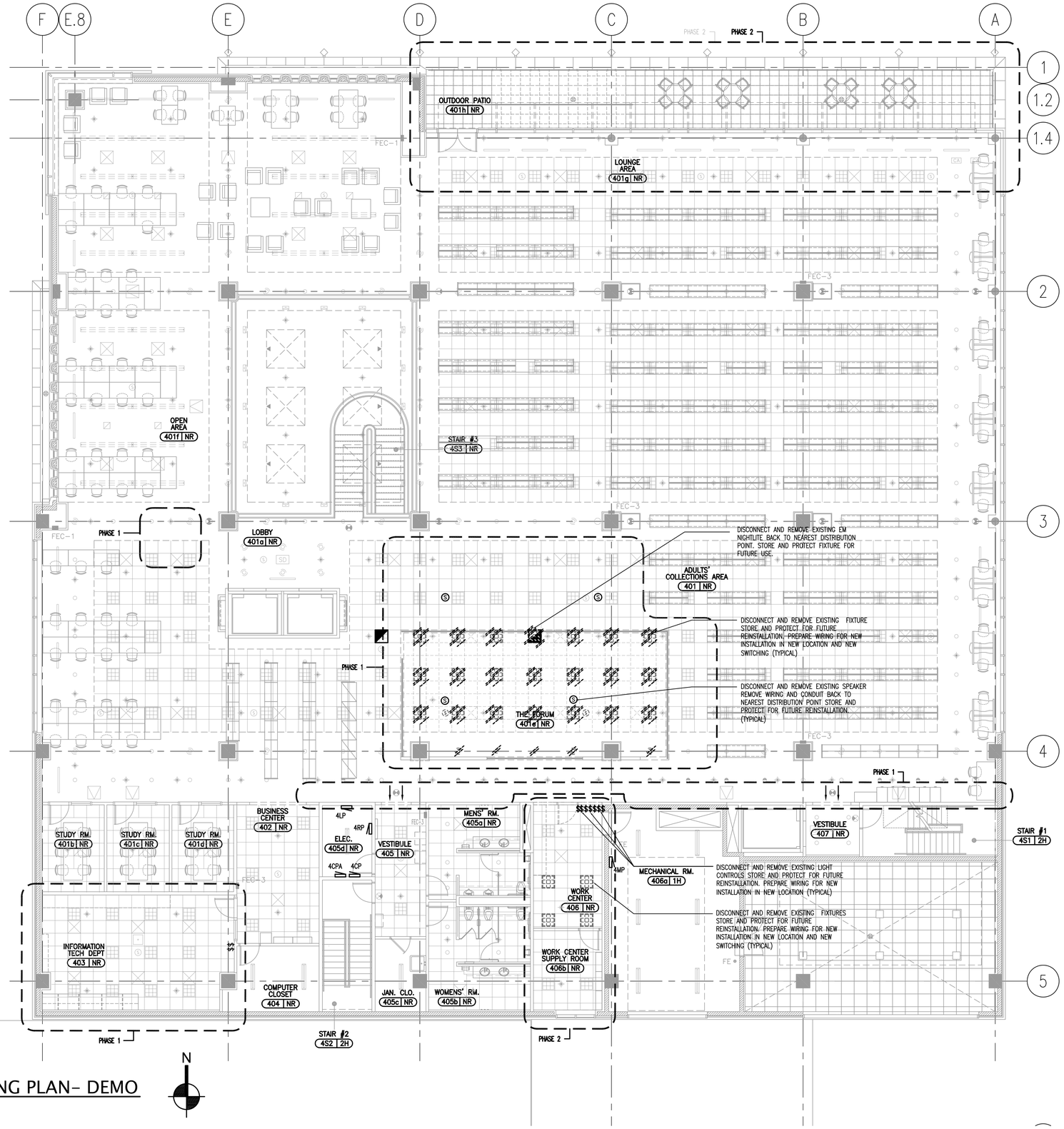

1 4TH FLOOR LIGHTING PLAN- DEMO
SCALE: 1/8" = 1'-0"

REV.	DATE	ISSUE
	8-14-15	ISSUE FOR BID AND PERMIT

DATE SIGNED:

Des Plaines Public Library
Phased Improvements

PROJECT NUMBER: 13300

4TH FLOOR LIGHTING PLAN DEMO

ED2.3

NOTES:

1. CIRCUIT NUMBERS SHOWN REPRESENT THE GENERAL INTENT AND ARE FOR REFERENCE ONLY. USE NEAREST CIRCUITS MADE AVAILABLE DURING DEMOLITION. DOCUMENT BEFORE AND AFTER INSTALLATION
2. REMOVE AND CAP TO NEAREST ACCESSIBLE JUNCTION BOX ANY UNNECESSARY CONDUIT AND WIRE.
3. ARCHITECT TO PROVIDE FINAL DIMENSIONS FOR ALL BOXES; ETC. PRIOR TO INSTALLATION.
4. VERIFY ALL FURNITURE LOCATIONS, SWITCHING ETC. IN ALL SPACES PRIOR TO INSTALLATION
5. ELECTRICAL CONTRACTOR SHALL VERIFY THE NUMBER OF POWER AND DATA RECEPTACLES REQUIRED PER FURNITURE, COORDINATE WITH ARCHITECT
6. ALL COMPUTER RECEPTACLES SHALL HAVE ISOLATED GROUND
7. ELECTRICAL CONTRACTOR SHALL REPLACE / PROVIDE THAT A CORRECT TYPE AND NUMBER OF POWER AND DATA AS PER FURNITURE PLANS
8. REMOUNTED ALL EXISTING FLOOR RECEPTACLES AS REQUIRED PER THE NEW FLOOR FINISH, COORDINATE WITH ARCHITECT (TYPICAL)

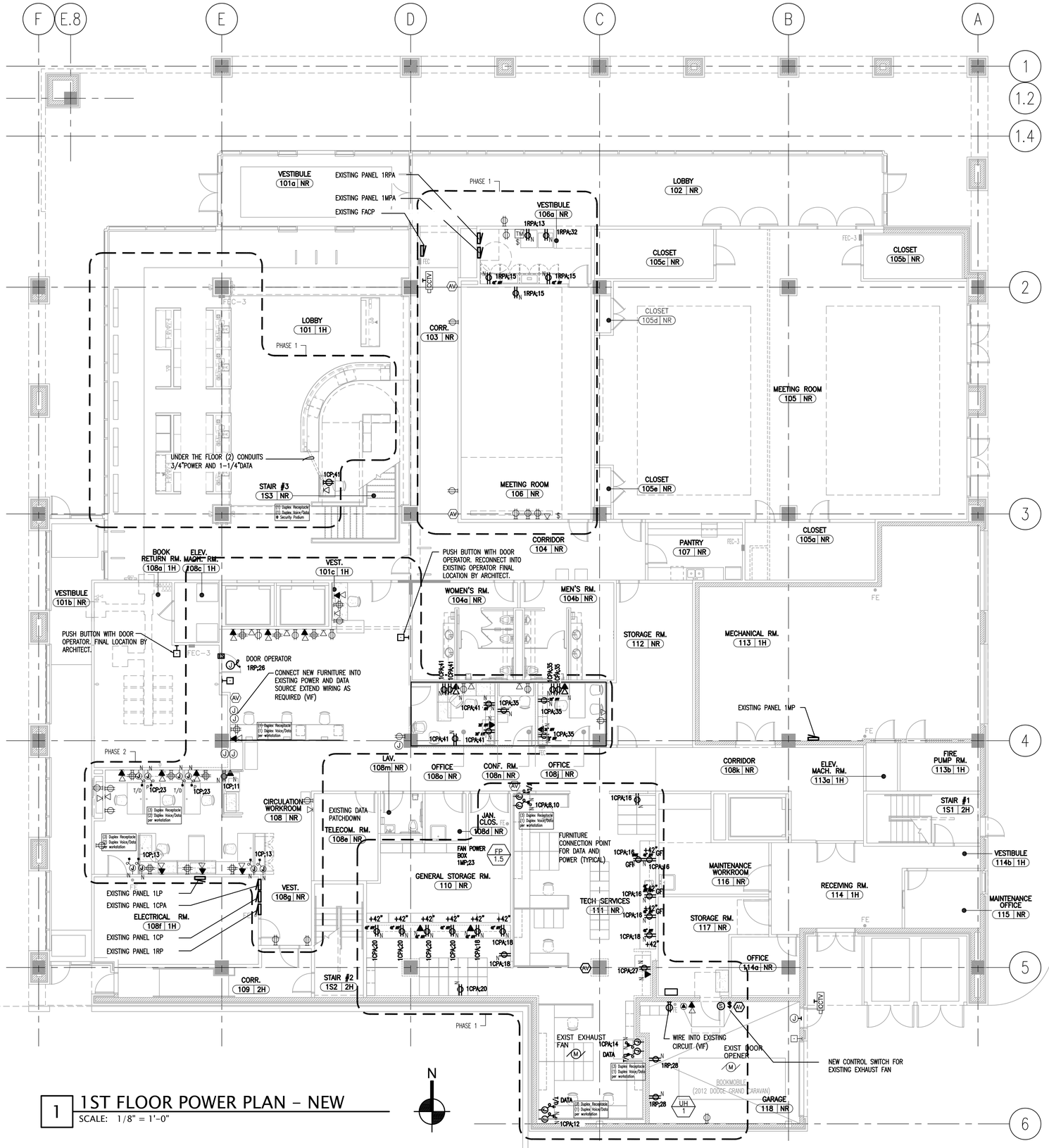

1 1ST FLOOR POWER PLAN - NEW
SCALE: 1/8" = 1'-0"

ARCHITECTURE PLANNING INTERIORS
LOHAN ANDERSON

DES PLAINES PUBLIC LIBRARY, OWNER
1501 ELLINWOOD ST., DES PLAINES, IL 60016

LOHAN ANDERSON, ARCH./INT.
401 N. MICHIGAN AVE., CHICAGO, IL 60611

CALOR DESIGN GROUP, LTD., MEP/FP
2217 N. WESTERN AVE., CHICAGO, IL 60647

C. S. ASSOCIATES, INC., STRUC.
4532 W. 103RD ST., OAK LAWN, IL 60453

REV.	DATE	ISSUE
	8-14-15	ISSUE FOR BID AND PERMIT

DATE SIGNED:

Des Plaines Public Library
Phased Improvements

PROJECT NUMBER: 13300

1ST FLOOR
POWER PLAN - NEW

E1.1

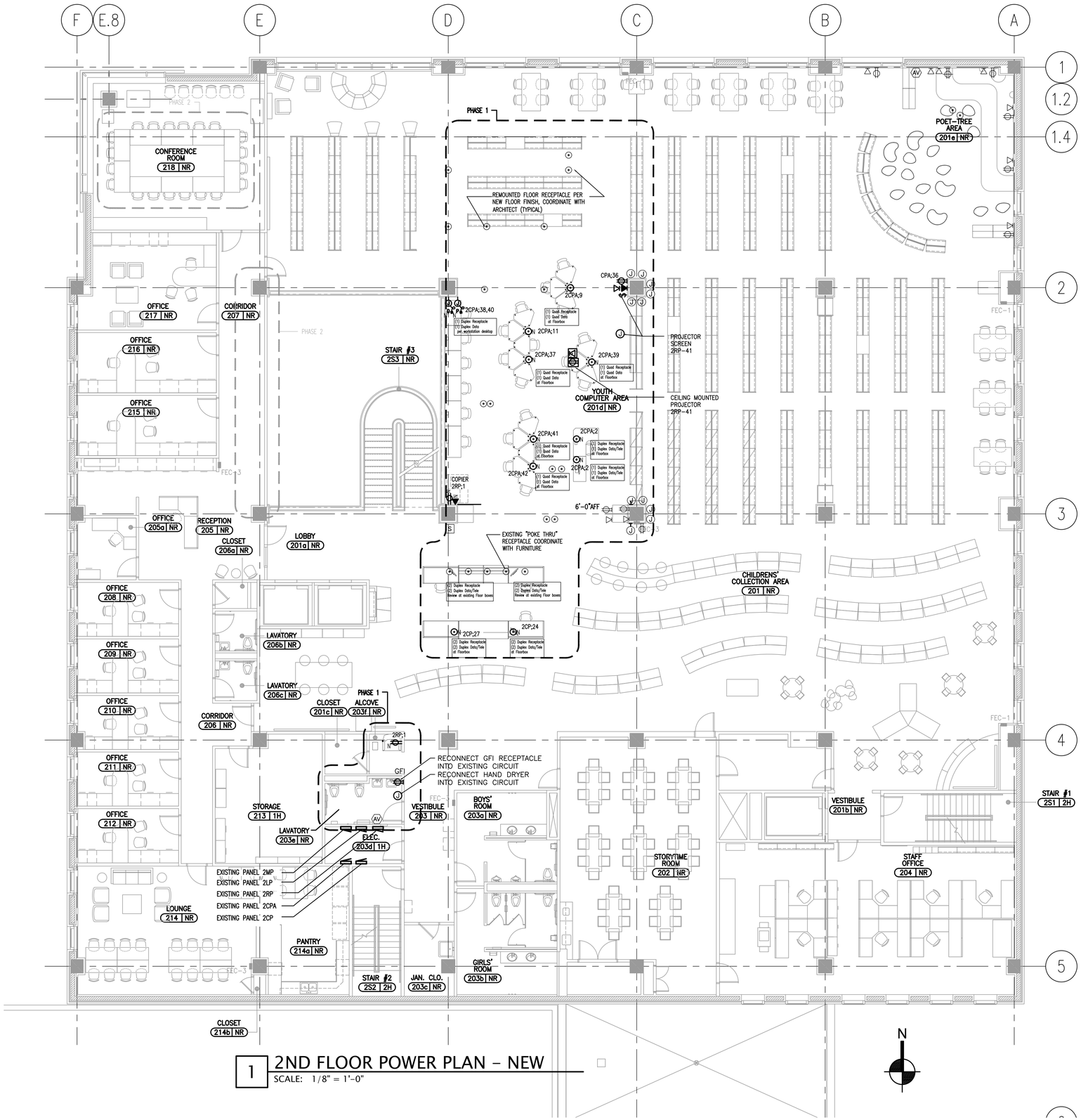

1 2ND FLOOR POWER PLAN - NEW

SCALE: 1/8" = 1'-0"

ARCHITECTURE PLANNING INTERIORS

LOHAN ANDERSON

DES PLAINES PUBLIC LIBRARY, OWNER
1501 ELLINWOOD ST., DES PLAINES, IL 60016

LOHAN ANDERSON, ARCH./INT.
401 N. MICHIGAN AVE., CHICAGO, IL 60611

CALOR DESIGN GROUP, LTD., MEP/FP
2217 N. WESTERN AVE., CHICAGO, IL 60647

C. S. ASSOCIATES, INC., STRUC.
4532 W. 103RD ST., OAK LAWN, IL 60453

NOTES:

1. CIRCUIT NUMBERS SHOWN REPRESENT THE GENERAL INTENT AND ARE FOR REFERENCE ONLY. USE NEAREST CIRCUITS MADE AVAILABLE DURING DEMOLITION. DOCUMENT BEFORE AND AFTER INSTALLATION
2. REMOVE AND CAP TO NEAREST ACCESSIBLE JUNCTION BOX ANY UNNECESSARY CONDUIT AND WIRE.
3. ARCHITECT TO PROVIDE FINAL DIMENSIONS FOR ALL BOXES; ETC. PRIOR TO INSTALLATION.
4. VERIFY ALL FURNITURE LOCATIONS, SWITCHING ETC. IN ALL SPACES PRIOR TO INSTALLATION
5. ELECTRICAL CONTRACTOR SHALL VERIFY THE NUMBER OF POWER AND DATA RECEPTACLES REQUIRED PER FURNITURE, COORDINATE WITH ARCHITECT
6. ALL COMPUTER RECEPTACLES SHALL HAVE ISOLATED GROUND
7. ELECTRICAL CONTRACTOR SHALL REPLACE / PROVIDE THAT A CORRECT TYPE AND NUMBER OF POWER AND DATA AS PER FURNITURE PLANS
8. REMOUNTED ALL EXISTING FLOOR RECEPTACLES AS REQUIRED PER THE NEW FLOOR FINISH, COORDINATE WITH ARCHITECT (TYPICAL)

REV.	DATE	ISSUE
	8-14-15	ISSUE FOR BID AND PERMIT

DATE SIGNED:

Des Plaines Public Library
Phased Improvements

PROJECT NUMBER: 13300

2ND FLOOR POWER PLAN - NEW

E1.2

ARCHITECTURE PLANNING INTERIORS
LOHAN ANDERSON

DES PLAINES PUBLIC LIBRARY, OWNER
1501 ELLINWOOD ST., DES PLAINES, IL 60016

LOHAN ANDERSON, ARCH./INT.
401 N. MICHIGAN AVE., CHICAGO, IL 60611

CALOR DESIGN GROUP, LTD., MEP/FP
2217 N. WESTERN AVE., CHICAGO, IL 60647

C. S. ASSOCIATES, INC., STRUC.
4532 W. 103RD ST., OAK LAWN, IL 60453

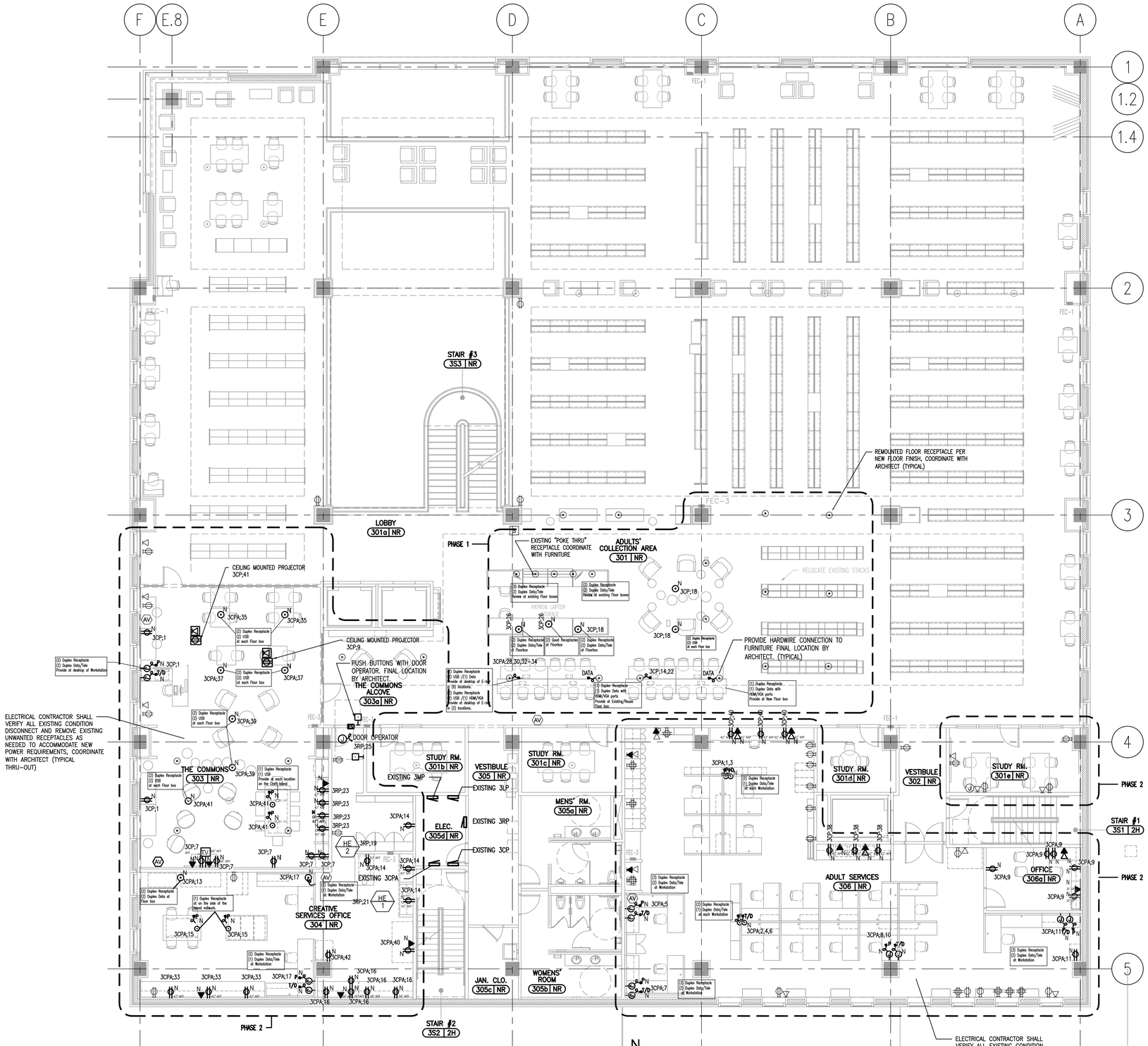

1 3RD FLOOR POWER PLAN - NEW
SCALE: 1/8" = 1'-0"

NOTES:

1. CIRCUIT NUMBERS SHOWN REPRESENT THE GENERAL INTENT AND ARE FOR REFERENCE ONLY. USE NEAREST CIRCUITS MADE AVAILABLE DURING DEMOLITION. DOCUMENT BEFORE AND AFTER INSTALLATION
2. REMOVE AND CAP TO NEAREST ACCESSIBLE JUNCTION BOX ANY UNNECESSARY CONDUIT AND WIRE.
3. ARCHITECT TO PROVIDE FINAL DIMENSIONS FOR ALL BOXES; ETC. PRIOR TO INSTALLATION.
4. VERIFY ALL FURNITURE LOCATIONS, SWITCHING ETC. IN ALL SPACES PRIOR TO INSTALLATION
5. ELECTRICAL CONTRACTOR SHALL VERIFY THE NUMBER OF POWER AND DATA RECEPTACLES REQUIRED PER FURNITURE, COORDINATE WITH ARCHITECT
6. ALL COMPUTER RECEPTACLES SHALL HAVE ISOLATED GROUND
7. ELECTRICAL CONTRACTOR SHALL REPLACE / PROVIDE THAT A CORRECT TYPE AND NUMBER OF POWER AND DATA AS PER FURNITURE PLANS
8. REMOUNTED ALL EXISTING FLOOR RECEPTACLES AS REQUIRED PER THE NEW FLOOR FINISH, COORDINATE WITH ARCHITECT (TYPICAL)

REV.	DATE	ISSUE
	8-14-15	ISSUE FOR BID AND PERMIT

DATE SIGNED:

Des Plaines Public Library
Phased Improvements

PROJECT NUMBER: 13300

3RD FLOOR
POWER PLAN - NEW

E1.3

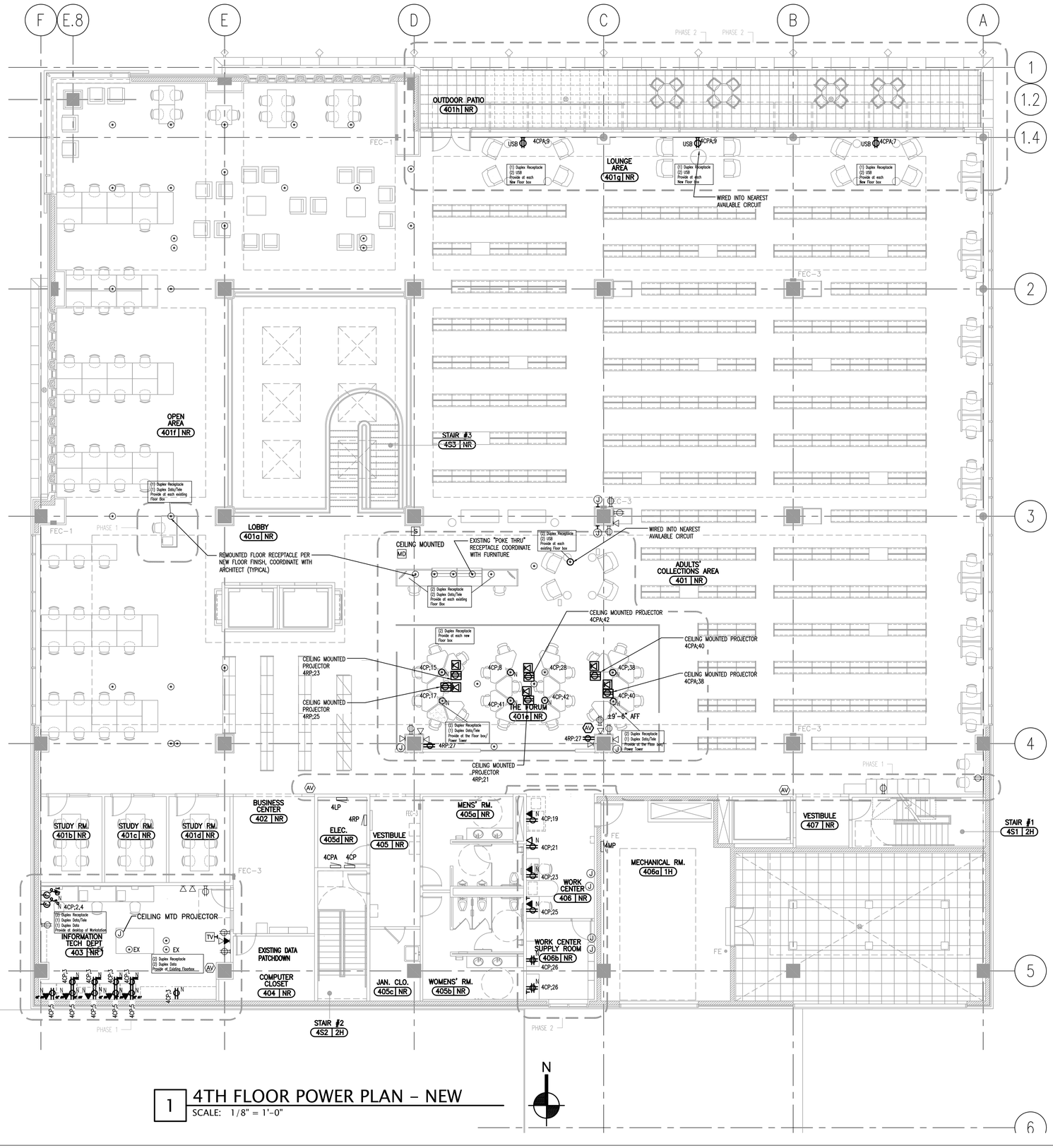

1 4TH FLOOR POWER PLAN - NEW

SCALE: 1/8" = 1'-0"

NOTES:

1. CIRCUIT NUMBERS SHOWN REPRESENT THE GENERAL INTENT AND ARE FOR REFERENCE ONLY. USE NEAREST CIRCUITS MADE AVAILABLE DURING DEMOLITION. DOCUMENT BEFORE AND AFTER INSTALLATION
2. REMOVE AND CAP TO NEAREST ACCESSIBLE JUNCTION BOX ANY UNNECESSARY CONDUIT AND WIRE.
3. ARCHITECT TO PROVIDE FINAL DIMENSIONS FOR ALL BOXES; ETC. PRIOR TO INSTALLATION.
4. VERIFY ALL FURNITURE LOCATIONS, SWITCHING ETC. IN ALL SPACES PRIOR TO INSTALLATION
5. ELECTRICAL CONTRACTOR SHALL VERIFY THE NUMBER OF POWER AND DATA RECEPTACLES REQUIRED PER FURNITURE, COORDINATE WITH ARCHITECT
6. ALL COMPUTER RECEPTACLES SHALL HAVE ISOLATED GROUND
7. ELECTRICAL CONTRACTOR SHALL REPLACE / PROVIDE THAT A CORRECT TYPE AND NUMBER OF POWER AND DATA AS PER FURNITURE PLANS
8. REMOUNTED ALL EXISTING FLOOR RECEPTACLES AS REQUIRED PER THE NEW FLOOR FINISH, COORDINATE WITH ARCHITECT (TYPICAL)

ARCHITECTURE PLANNING INTERIORS

LOHAN ANDERSON

DES PLAINES PUBLIC LIBRARY, OWNER
1501 ELLINWOOD ST., DES PLAINES, IL 60016

LOHAN ANDERSON, ARCH./INT.
401 N. MICHIGAN AVE., CHICAGO, IL 60611

CALOR DESIGN GROUP, LTD., MEP/FP
2217 N. WESTERN AVE., CHICAGO, IL 60647

C. S. ASSOCIATES, INC., STRUC.
4532 W. 103RD ST., OAK LAWN, IL 60453

REV.	DATE	ISSUE
	8-14-15	ISSUE FOR BID AND PERMIT

DATE SIGNED:

Des Plaines Public Library
Phased Improvements

PROJECT NUMBER: 13300

4TH FLOOR
POWER PLAN - NEW

E1.4

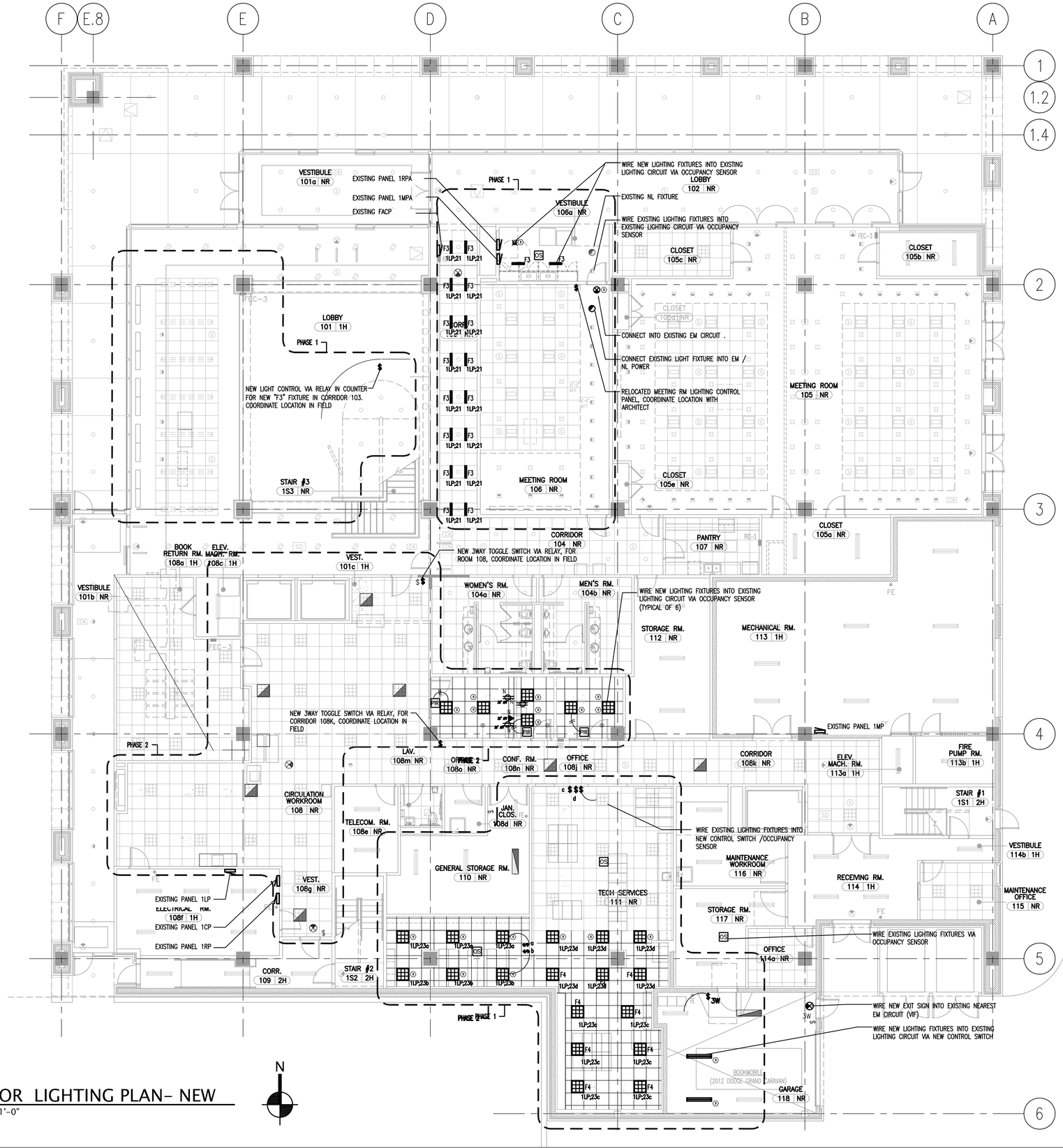

1 1ST FLOOR LIGHTING PLAN- NEW

SCALE: 1/8" = 1'-0"

ARCHITECTURE PLANNING INTERIORS

LOHAN ANDERSON

DES PLAINES PUBLIC LIBRARY, OWNER
1501 ELLINWOOD ST., DES PLAINES, IL 60016

LOHAN ANDERSON, ARCH./INT.
401 N. MICHIGAN AVE., CHICAGO, IL 60611

CALOR DESIGN GROUP, LTD., MEP/FP
2217 N. WESTERN AVE., CHICAGO, IL 60647

C. S. ASSOCIATES, INC., STRUC.
4532 W. 103RD ST., OAK LAWN, IL 60453

REV.	DATE	ISSUE
	8-14-15	ISSUE FOR BID AND PERMIT

DATE SIGNED:

Des Plaines Public Library
Phased Improvements

PROJECT NUMBER: 13300

1ST FLOOR
LIGHTING PLAN
NEW

E2.1

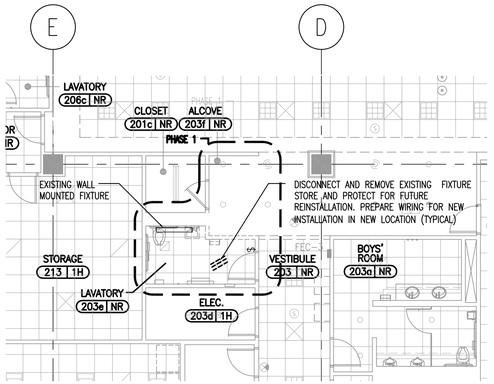

2 PARTIAL 2ND FLOOR LIGHTING PLAN- DEMO

SCALE: 1/8" = 1'-0"

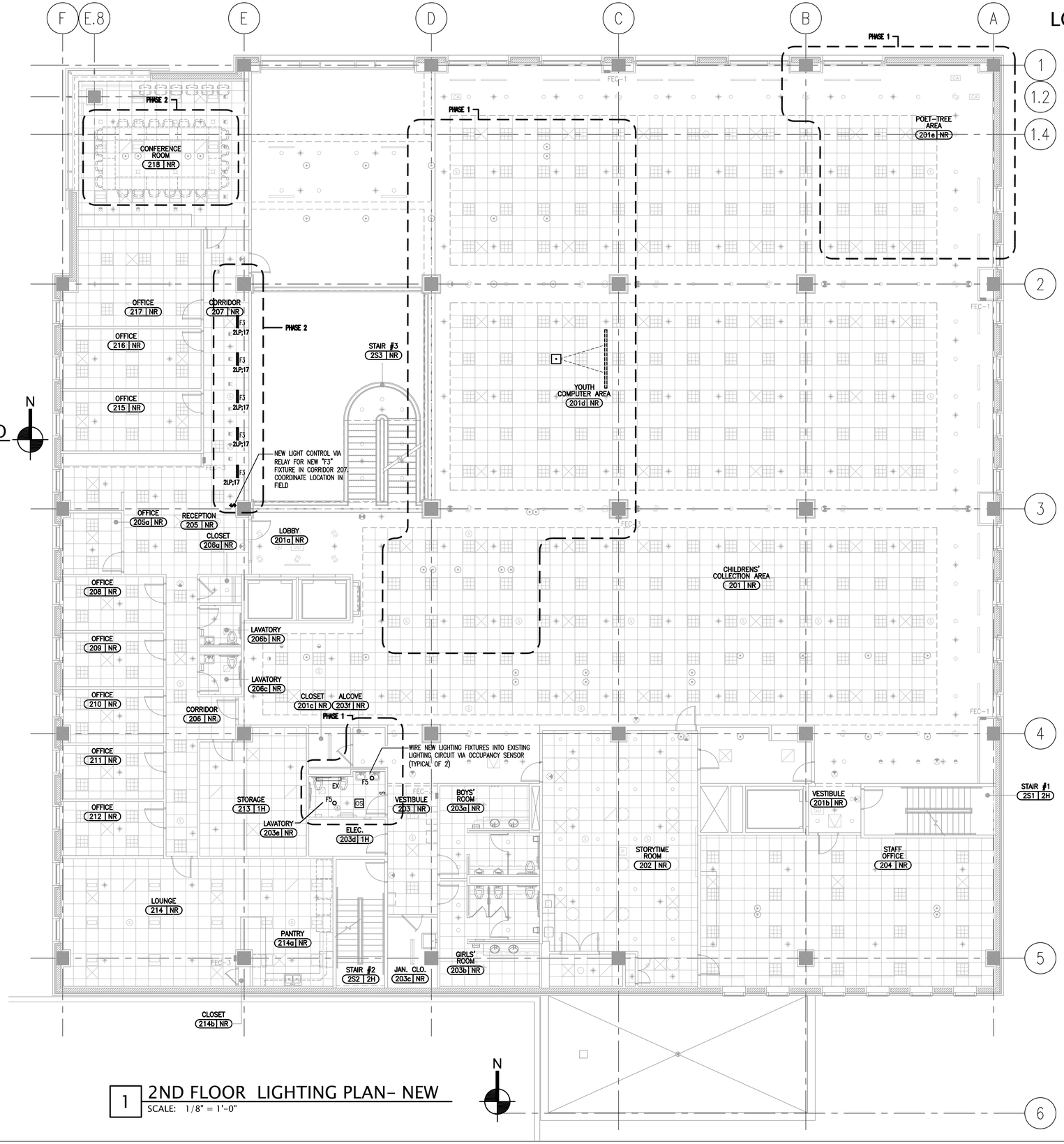

1 2ND FLOOR LIGHTING PLAN- NEW

SCALE: 1/8" = 1'-0"

ARCHITECTURE PLANNING INTERIORS

LOHAN ANDERSON

DES PLAINES PUBLIC LIBRARY, OWNER
1501 ELLINWOOD ST., DES PLAINES, IL 60016

LOHAN ANDERSON, ARCH./INT.
401 N. MICHIGAN AVE., CHICAGO, IL 60611

CALOR DESIGN GROUP, LTD., MEP/FP
2217 N. WESTERN AVE., CHICAGO, IL 60647

C. S. ASSOCIATES, INC., STRUC.
4532 W. 103RD ST., OAK LAWN, IL 60453

REV.	DATE	ISSUE
	8-14-15	ISSUE FOR BID AND PERMIT

DATE SIGNED:

Des Plaines Public Library
Phased Improvements

PROJECT NUMBER: 13300

2ND FLOOR
LIGHTING PLAN
NEW / DEMO

E2.2

ARCHITECTURE PLANNING INTERIORS

LOHAN ANDERSON

DES PLAINES PUBLIC LIBRARY, OWNER
1501 ELLINWOOD ST., DES PLAINES, IL 60016

LOHAN ANDERSON, ARCH./INT.
401 N. MICHIGAN AVE., CHICAGO, IL 60611

CALOR DESIGN GROUP, LTD., MEP/FP
2217 N. WESTERN AVE., CHICAGO, IL 60647

C. S. ASSOCIATES, INC., STRUC.
4532 W. 103RD ST., OAK LAWN, IL 60453

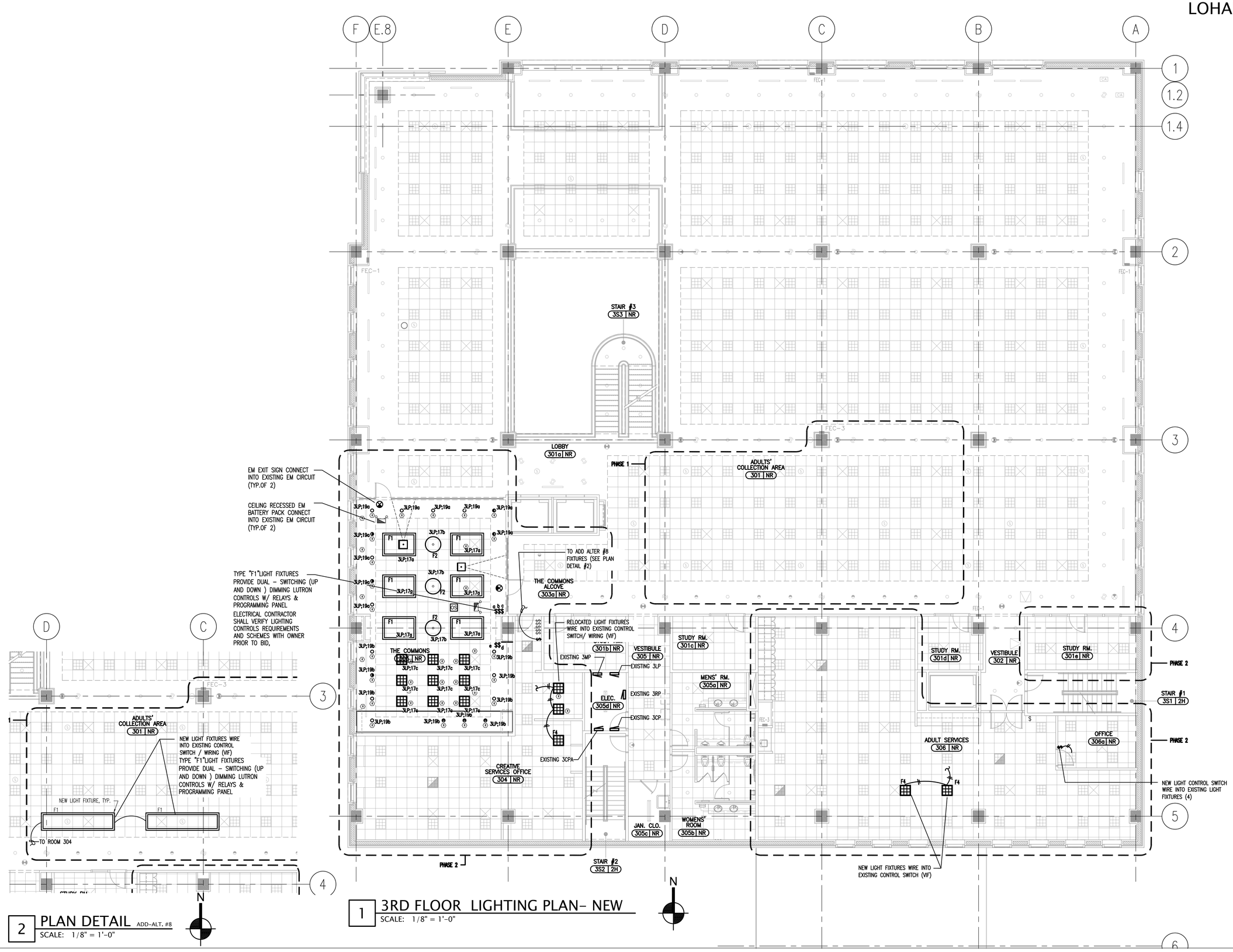

2 PLAN DETAIL ADD-ALT. #8
SCALE: 1/8" = 1'-0"

1 3RD FLOOR LIGHTING PLAN- NEW
SCALE: 1/8" = 1'-0"

REV.	DATE	ISSUE
	8-14-15	ISSUE FOR BID AND PERMIT

DATE SIGNED:

Des Plaines Public Library
Phased Improvements

PROJECT NUMBER: 13300

3RD FLOOR
LIGHTING PLAN
NEW

E2.3

ARCHITECTURE PLANNING INTERIORS
LOHAN ANDERSON

DES PLAINES PUBLIC LIBRARY, OWNER
1501 ELLINWOOD ST., DES PLAINES, IL 60016

LOHAN ANDERSON, ARCH./INT.
401 N. MICHIGAN AVE., CHICAGO, IL 60611

CALOR DESIGN GROUP, LTD., MEP/FP
2217 N. WESTERN AVE., CHICAGO, IL 60647

C. S. ASSOCIATES, INC., STRUC.
4532 W. 103RD ST., OAK LAWN, IL 60453

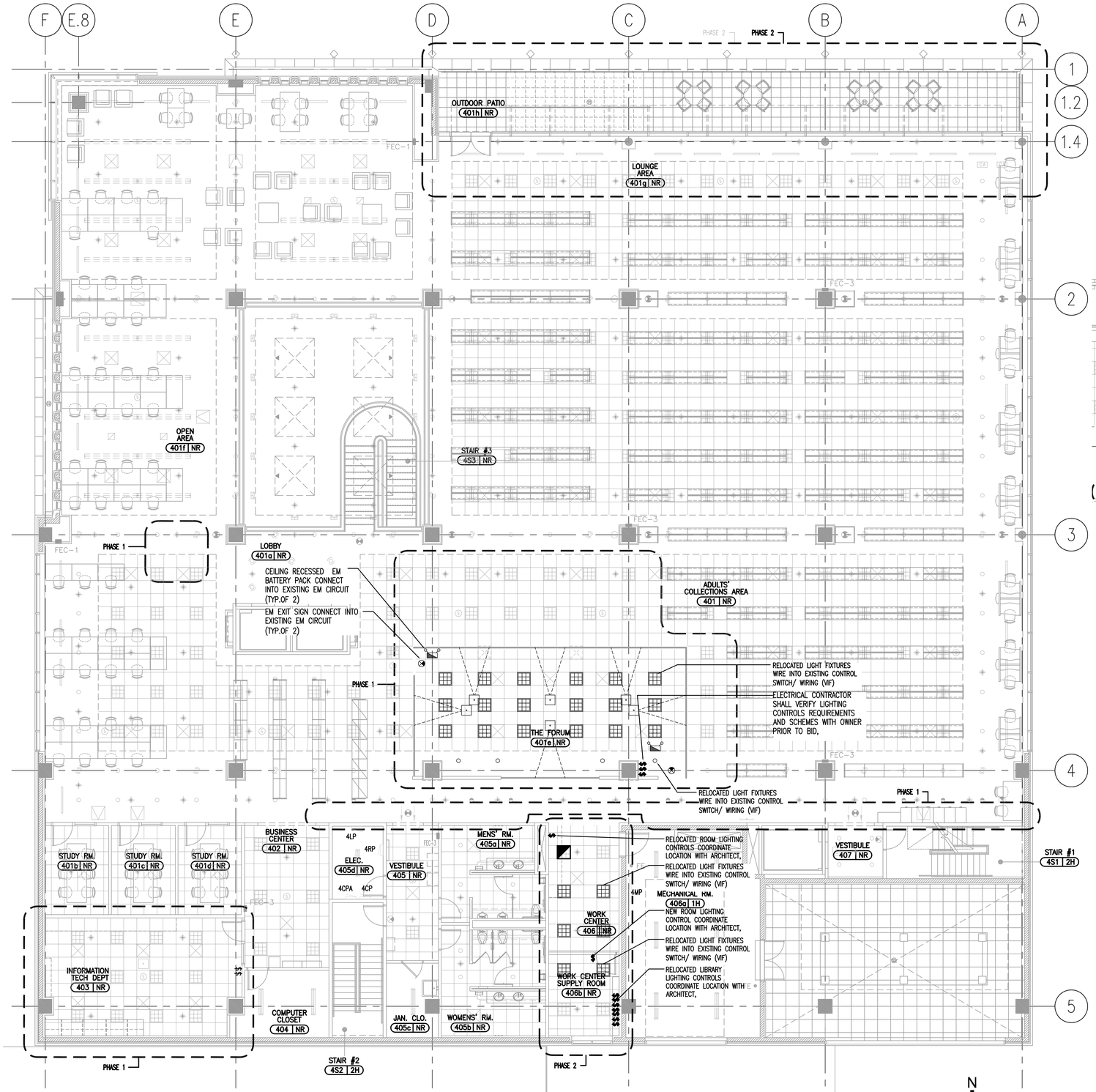

1 4TH FLOOR LIGHTING PLAN- NEW
SCALE: 1/8" = 1'-0"

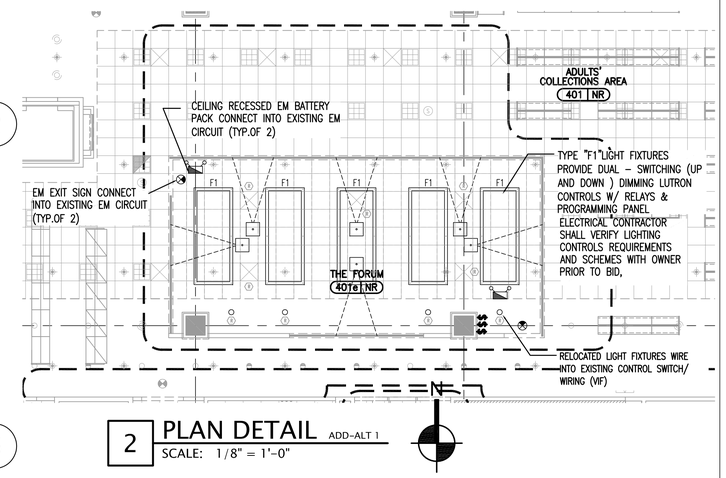

2 PLAN DETAIL ADD-ALT 1
SCALE: 1/8" = 1'-0"

REV.	DATE	ISSUE
	8-14-15	ISSUE FOR BID AND PERMIT

DATE SIGNED:

Des Plaines Public Library
Phased Improvements

PROJECT NUMBER: 13300

4TH FLOOR
LIGHTING PLAN
NEW

E2.4

POWER SYMBOLS

WALL MOUNTED	FLOOR BOX	POKE-THROUGH	CEILING MOUNTED	
				EXISTING DEVICE
				DUPLEX RECEPTACLE
				QUAD RECEPTACLE
				SINGLE RECEPTACLE
IG	IG	IG	IG	ISOLATED GROUND DUPLEX RECEPTACLE
IG	IG	IG	IG	ISOLATED GROUND QUAD RECEPTACLE
IG	IG	IG	IG	COMBINATION IG DUPLEX RECEPTACLE, DUPLEX RECEPTACLE AND TELEPHONE/ DATA SYSTEMS OUTLET
				SPECIAL RECEPTACLE – REFER TO SPECIAL RECEPTACLE SCHEDULE
P	P	P		JUNCTION BOX WITH FLEXIBLE CONDUIT AND FINAL EQUIPMENT OR FURNITURE SYSTEM POWER CONNECTION

WP
XX

ADJACENT LETTERS IN THE SYMBOLS ABOVE INDICATE THE FOLLOWING:

"CR"	INDICATES CHILD RESISTENT (SAFETY TYPE)
"E"	INDICATES RECEPTACLE FED BY EMERGENCY CIRCUIT
"EP"	INDICATES RECEPTACLE IS EXPLOSION PROOF
"EWC"	INDICATES RECEPTACLE SERVES ELECTRIC WATER COOLER
"GFI"	INDICATES RECEPTACLE HAS GROUND FAULT CIRCUIT INTERRUPTER
"IG"	INDICATES RECEPTACLE HAS ISOLATED GROUND-COMPUTER
"TVS"	INDICATES RECEPTACLE HAS TRANSIENT VOLTAGE SURGE SUPPRESSION
"WP"	INDICATES RECEPTACLE HAS WATERPROOF COVER
"XX"	INDICATES RECEPTACLE CIRCUIT NUMBER
"S"	INDICATES RECEPTACLE IS SAFETY TYPE
"USB"	INDICATES UNIVERSAL SERIAL BUS CONNECTION
"N"	INDICATES NEW DEVICE

DUPLEX RECEPTACLE – MOUNTING HEIGHT AS NOTED ABOVE COUNTER

ELECTRICAL SYMBOL LIST

LIGHTING/LIGHTING CONTROL EQUIPMENT SYMBOLS

LIGHTING FIXTURE FOR DECRIPTION SEE LIGHTING FIXTURE SCHEDULE

NL NL NL NL
NIGHT LIGHT /EMERGENCY LIGHTING FIXTURE WITH INTEGRATED BATTERY BACK-UP. FOR DESCRIPTION SEE LIGHTING FIXTURE SCHEDULE.

EMERGENCY LIGHTING FIXTURE WITH BATTERY BACK-UP.

REMOTE EMERGENCY LIGHTING FIXTURE WITH BATTERY BACK-UP.

XXa
LOW VOLTAGE RELAY SWITCH WITH 277V THROUGH LPA/B/C LOW VOLTAGE VIA RELATED RELAY OR LOCAL LOW VOLTAGE SWITCH WITH PLENUM RATED POWER PACK AS NOTED.

LIGHT SWITCH ABBREVIATIONS:

"a"	LIGHTS CONTROLLED	"WP"	WEATHERPROOF
"D"	DIMMER SWITCH	"2P"	TWO POLE
"EP"	EXPLOSION PROOF	"3P"	THREE POLE
"K"	KEY OPERATED	"3W"	THREE-WAY
"P"	PILOT LIGHT	"4W"	FOUR-WAY
"XX"	CIRCUIT NUMBER	"T"	TIME SWITCH
"OS"	OCCUPANCY SENSOR		

3W
3 WAY LABELED "3W", 4 WAY LABELED "4W"

DS DAYLIGHT SENSOR

PIR INDIVIDUAL ROOM PASSIVE OCCUPANCY SENSOR

DT DUEL TECHNOLOGY ULTRASONIC MOTION DETECTOR/OCCUPANCY SENSOR

OS OPEN AREA OCCUPANCY SENSOR

COS CORRIDOR OCCUPANCY SENSOR

PP PLENUM RATED POWER PACK

RACEWAYS & WIRING

CONDUIT–CONCEALED ABOVE CEILING OR IN WALL

CONDUIT–CONCEALED IN FLOOR OR UNDERGROUND

CONDUIT–EXPOSED

CONDUIT–FLEXIBLE

CONDUIT HOMERUN
PHASE
NEUTRAL
GROUND

SURFACE METAL RACEWAY CONNECTION

ELECTRICAL ABBREVIATIONS

A, AMP	– AMPERAGE	F	– FUSE	NC	– NORMALLY CLOSED
AC–	AT COUNTER (48" AFF)	FBO	– FURNISHED BY OTHERS	NIC	– NOT IN CONTRACT
AD–	AT DESK (34" AFF)	FCU	– FAN COIL UNIT	NO	– NORMALLY OPEN
AM–	AT MONITOR (66" AFF)	FLA	– FULL LOAD AMPS	PB	– PUSHBUTTON
ACD–	ACCESS DOOR	GC	– GENERAL CONTRACTOR	PC	– PLUMBING CONTRACTOR
AFF	– ABOVE FINISHED FLOOR	GFI	– GROUND FAULT INTERRUPTER	PNL	– PANEL
A/C	– AIR CONDITIONING	GRD	– GROUND	SW	– SWITCH
AHU	– AIR HANDLING UNIT	HP	– HORSEPOWER	SWBD	– SWITCHBOARD
ATS	– AUTOMATIC TRANSFER SWITCH	IG	– ISOLATED GROUND	SWGR	– SWITCHGEAR
A/V–	AUDIO VISUAL	J/B	– JUNCTION BOX	TC	– TEMPERATURE CONTROL
BO–	BLANK OFF	LTG	– LIGHTING	TR	– TRANSFORMER
C	– CONDUIT	JPC	– JOCKEY PUMP CONTROLLER	TTC	– TELEPHONE TERMINAL CABINET
CCT	– CIRCUIT	M	– MOTOR	TVSS	– TRANSIENT VOLTAGE SURGE SUPPRESSOR
C/B	– CIRCUIT BREAKER	MC	– MECHANICAL CONTRACTOR	TYP	– TYPICAL
CECO–	COMMONWEALTH EDISON COMPANY	MCB	– MAIN CIRCUIT BREAKER	UON	– UNLESS OTHERWISE NOTED
CO	– CARBON MONOXIDE DETECTOR	MCC	– MOTOR CONTROL CENTER	V	– VOLTS
CU	– COPPER	MCP	– MAXIMUM CIRCUIT PROTECTION	VIF	– VERIFY IN FIELD
CT	– CURRENT TRANSFORMER	MLO	– MAIN LUGS ONLY	VFD	– VARIABLE FREQUENCY DRIVE
EC	– ELECTRICAL CONTRACTOR	MECH	– MECHANICAL	WP	– WEATHERPROOF
EQUIP	– EQUIPMENT	MOCP	– MAIN OVERCURRENT PROTECTION	W	– WATTS
ELECT	– ELECTRIC, ELECTRICAL	N	– NEUTRAL		
EM – EMERG	– EMERGENCY				
EX. EXIST	– EXISTING				

EXIT SIGN SYMBOLS

EXIT LIGHT FIXTURE WITH BATTERY BACK-UP.
COOPER LIGHTING CAX-277V SERIES OR EQUAL.

N NEW FIXTURE
CHANGE GLASS IN EXISTING FIXTURE
CG VIEWING SIDE OF FIXTURE (W/DIRECTIONAL ARROW)
E EXISTING FIXTURE
CF CHANGE EXISTING FIXTURE TO NEW FIXTURE
3 SIGN NUMBER (FOR ALL SIGNS)

SINGLE FACE SIGNS

1–	FIRE ESCAPE	2–	STAIR (S)/STAIRWAY	3–	EXIT
4–	FIRE ESCAPE	5–	STAIR (S)	6–	EXIT
7–	FIRE ESCAPE	8–	STAIR (S)	9–	EXIT
10–	FIRE ESCAPE	11–	STAIR (S)	12–	EXIT

DOUBLE FACE SIGNS

16–	FIRE ESCAPE	17A/17–	STAIR (S)/STAIRWAY	18–	EXIT
19–	FIRE ESCAPE	20A–	STAIR (S)	21–	EXIT
22–	FIRE ESCAPE	23A–	STAIR (S)	24–	EXIT

FIRE ALARM SYMBOLS LIST

FA	CITY FIRE ALARM BOX
FP OR PS	PULL STATION
D	HEAT DETECTOR
A	AUDIO ALARM DEVICE
V	VISUAL ALARM DEVICE WHERE: 75cd INDICATES 75 CANDELA STROBE
AV	AUDIO/VISUAL ALARM DEVICE
FACP	FIRE ALARM CONTROL PANEL
FAAP	FIRE ALARM ANNUNICIATOR PANEL
B	TROUBLE BELL
WF	WATER FLOW SWITCH
VSS	SPRINKLER VALVE SUPERVISORY (TAMPER) SWITCH
DD	DUCT SMOKE DETECTOR
SD	SMOKE DETECTOR
SSCP	SPRINKLER SUPERVISORY CONTROL PANEL

ELECTRICAL SCOPE OF WORK MASTER PLAN PHASES 1 AND 2

	ROOM NO.	ELECTRICAL POWER	ELECTRICAL DATA	LIGHTING AND CONTROLS	Quantity
FOURTH FLOOR PHASE 1					
ADULT SERVICES (AS) INFORMATION DESK	401	REVISE FLOOR-SUPPLIED POWER CONNECTIONS TO NEW FURNITURE		N/A	5
			REVISE FLOOR-SUPPLIED DATA CONNECTIONS TO NEW FURNITURE		5
PATRON STATIONS	401	REVISE FLOOR-SUPPLIED POWER CONNECTIONS TO NEW FURNITURE		N/A	6
			REVISE FLOOR-SUPPLIED DATA CONNECTIONS TO NEW FURNITURE		6
ADULT FORUM, COMPUTER AREA	401Z	REVISE FLOOR-SUPPLIED POWER CONNECTIONS TO NEW FURNITURE			6
			REVISE FLOOR-SUPPLIED DATA CONNECTIONS TO NEW FURNITURE		6
				REVISE LIGHTING AND CONTROLS	18
ADULT FORUM, COMPUTER AREA	**401Z**	**ALTERNATE**		**PROVIDE NEW LIGHTING AND CONTROLS**	5
COMPUTER HELP DESK	401A	REVISE FLOOR-SUPPLIED POWER CONNECTIONS TO NEW FURNITURE	REVISE FLOOR-SUPPLIED DATA CONNECTIONS TO NEW FURNITURE	N/A	
FOURTH FLOOR PHASE 2					
WORKROOM (REFERENCE STORAGE/READER'S SERVICES)	406	REVISE FLOOR-SUPPLIED POWER CONNECTIONS TO NEW FURNITURE		N/A	6
			REVISE FLOOR-SUPPLIED DATA CONNECTIONS TO NEW FURNITURE		6
IT WORKROOM (FORMER COMPUTER LAB)	403	REVISE FLOOR-SUPPLIED AND WALL-MOUNTED POWER CONNECTIONS TO NEW FURNITURE		N/A	10
			REVISE FLOOR-SUPPLIED AND WALL-MOUNTED DATA CONNECTIONS TO NEW FURNITURE		10

ARCHITECTURE PLANNING INTERIORS
LOHAN ANDERSON

DES PLAINES PUBLIC LIBRARY, OWNER
1501 ELLINWOOD ST., DES PLAINES, IL 60016

LOHAN ANDERSON, ARCH./INT.
401 N. MICHIGAN AVE., CHICAGO, IL 60611

CALOR DESIGN GROUP, LTD., MEP/FP
2217 N. WESTERN AVE., CHICAGO, IL 60647

C. S. ASSOCIATES, INC., STRUC.
4532 W. 103RD ST., OAK LAWN, IL 60453

ELECTRICAL SCOPE OF WORK MASTER PLAN PHASES 1 AND 2

	ROOM NO.	ELECTRICAL POWER	ELECTRICAL DATA	LIGHTING AND CONTROLS	THE QUANTITIE AND ARE O Quantity
FIRST FLOOR PHASE 1					
LOBBY SECURITY STATION	101	CAP EXISTING AND ADD NEW POWER IN NEW LOCATION		N/A	2
			CAP EXISTING AND ADD NEW DATA IN NEW LOCATION		2
LOBBY SELF-CHECK OUT	101	N/A	N/A	N/A	1
VIDEO MONITORS	**101**	**NEW POWER ON COLUMNS**		**N/A**	4
			NEW DATA ON COLUMNS		4
SHELVING-WEST WALL	101	N/A	N/A	N/A	
CIRCULATION DECK	101	EXTEND POWER TO NEW SECURITY DESK		N/A	
			EXTEND DATA TO NEW SECURITY DESK		
VESTIBULE (SNACK/VENDING) (FORMER PROJECTION ROOM)	106A	DISCONNECT & REMOVE EXISTING POWER OUTLETS			1
		INSTALL NEW WALL MOUNTED POWER OUTLETS			4
			DISCONNECT & REMOVE EXISTING DATA OUTLETS		4
				ADD NEW CEILING-MOUNTED LIGHT FIXTURES	2
				DISCONNECT & REMOVE LIGHT(S) & CONTROLS	2
				DISCONNECT & REMOVE AND ADD EXIT LIGHTS	2
				REINSTALL LIGHTING WITH CONTROLS & MEETING ROOM LIGHTING CONTROL PANEL	1
CORRIDOR (ART WALL, EAST LOBBY)	104	EXISTING RECEPTACLES TO REMAIN			0
			TWO FA AUDIO-VISUAL ALARMS TO REMAIN; **REMOVE TWO TELEPHONES**		2
				ADD CEILING-MOUNTED LIGHT FIXTURES WITH ELECTRONIC CONTROLS	16
FIRST FLOOR PHASE 2					
TECHNICAL WORKROOM (FORMER GEN. STORAGE & MOBILE GARAGE)	111	DISCONNECT & REMOVE EXISTING POWER OUTLETS			10
		REVISE FLOOR-SUPPLIED AND WALL-MOUNTED POWER CONNECTIONS TO NEW FURNITURE			10
			DISCONNECT & REMOVE EXISTING DATA OUTLETS		5
			REVISE FLOOR-SUPPLIED AND WALL-MOUNTED DATA CONNECTIONS TO NEW FURNITURE		5
			MOVE ONE FA AUDIO-VISUAL ALARM		1
				DISCONNECT & REMOVE LIGHTS & CONTROLS	4
				PROVIDE NEW LIGHTING AND CONTROLS	18
MAINTENANCE WORKROOM, STORAGE, RECEIVING, OFFICES	113A, 114, 115, 116, 117			REVISE LIGHT SWITCHING	4
WORKROOM (STORAGE AND SMALLER GARAGE)	118	REVISE POWER TO ONE ELIMINATED & ONE RELOCATED UNIT HEATER WITH 120 VOLT CONTROLS.			2
			INSTALL NEW FA AUDIO-VISUAL ALARM AND CONNECT TO FA SYSTEM		1
				REVISE LIGHTING AND SWITCHING	2
CIRC SERVICES MANAGER'S OFFICE, TECHL SERVICES MANAGER'S OFFICE & CONFERENCE ROOM	108J, 108N, 108O	REVISE WALL-MOUNTED POWER OUTLETS & CONNECTIONS TO NEW FURNITURE			6
			REVISE WALL-MOUNTED DATA OUTLETS & CONNECTIONS TO NEW FURNITURE		3
				DISCONNECT & REMOVE EXISTING LIGHTING AND CONTROLS	3
				PROVIDE NEW LIGHTING AND CONTROLS	6
CIRCULATION SERVICES WORKROOM	108	REVISE FLOOR-SUPPLIED AND WALL-MOUNTED POWER CONNECTIONS TO NEW FURNITURE			6
		RELOCATE DOOR CONTROLS			1
			REVISE FLOOR-SUPPLIED AND WALL-MOUNTED DATA CONNECTIONS TO NEW FURNITURE		4
				REVISE LIGHTING CONTROLS	3
MAIN BUILDING STORAGE	110	DISCONNECT & REMOVE POWER OUTLETS IN DEMOLISHED WALLS			3
			DISCONNECT & REMOVE DATA OUTLETS IN DEMOLISHED WALLS		3
				REVISE LIGHTING AND SWITCHING	4

ELECTRICAL SCOPE OF WORK MASTER PLAN PHASES 1 AND 2

	ROOM NO.	ELECTRICAL POWER	ELECTRICAL DATA	LIGHTING AND CONTROLS	Quantity
SECOND FLOOR PHASE 1					
YOUTH SERVICE (YS) INFORMATION DESK	201	REVISE FLOOR-SUPPLIED POWER CONNECTIONS TO NEW FURNITURE		N/A	5
			REVISE FLOOR-SUPPLIED DATA CONNECTIONS TO NEW FURNITURE		5
FAMILY TOILET	203E	REMOVE & REVISED POWER TO FAUCETS, RECEPTACLES AND DEMOLISHED WALLS			5
			REMOVE DATA FROM DEMOLISHED WALLS		2
				POWER NEW & RELOCATED CEILING-MOUNTED LIGHT FIXTURES AND CONTROLS	2
YS COMPUTER AREA	201	REVISE FLOOR-SUPPLIED AND WALL-MOUNTED POWER CONNECTIONS TO NEW FURNITURE		N/A	8
			REVISE FLOOR-SUPPLIED AND WALL-MOUNTED DATA CONNECTIONS TO NEW FURNITURE		8
POETRY CORNER	201	REVISE WALL-MOUNTED POWER OUTLETS			2
			REVISE WALL-MOUNTED DATA OUTLETS		2
				REVISE LIGHTING AND CONTROLS	2
SECOND FLOOR PHASE 2					
TRAINING ROOM (BOARD ROOM)	218	N/A	N/A	N/A	
CORRIDOR (ADMINISTRATION ART WORK)	207		MOVE ONE FA AUDIO-VISUAL ALARM		1
		CAP AND REMOVE EXISTING RECEPTACLES			2
				ADD CEILING-MOUNTED LIGHT FIXTURES WITH ELECTRONIC CONTROLS	5

MASTER PLAN PHASES 1 AND 2

	ROOM NO.	ELECTRICAL POWER	ELECTRICAL DATA	LIGHTING AND CONTROLS	Quantity
THIRD FLOOR PHASE 1					
ADULT SERVICES (AS) INFORMATION DESK	301	REVISE FLOOR-SUPPLIED POWER CONNECTIONS TO NEW FURNITURE		N/A	5
			REVISE FLOOR-SUPPLIED DATA CONNECTIONS TO NEW FURNITURE		5
ADULT E-BAR	301	REVISE FLOOR-SUPPLIED POWER CONNECTIONS TO NEW FURNITURE		N/A	4
			REVISE FLOOR-SUPPLIED DATA CONNECTIONS TO NEW FURNITURE		4
ADULT E-LOUNGE	301	REVISE FLOOR-SUPPLIED POWER CONNECTIONS TO NEW FURNITURE		N/A	4
			REVISE FLOOR-SUPPLIED DATA CONNECTIONS TO NEW FURNITURE		4
THIRD FLOOR PHASE 2					
ROTARY HERITAGE READING ROOM (FORMER TEEN STUDY LOUNGE)	302E	N/A	N/A	N/A	
STUDY ROOM (THE COMMONS) (FORMER ROTARY HERITAGE READING ROOM)	303	REVISE FLOOR-SUPPLIED AND WALL-MOUNTED POWER CONNECTIONS TO NEW FURNITURE			10
			REVISE FLOOR-SUPPLIED AND WALL-MOUNTED DATA CONNECTIONS TO NEW FURNITURE		10
				REVISE LIGHTING AND CONTROLS	29
				PROVIDE NEW & RELOCATED LIGHTING AND CONTROLS	9
STAFF OFFICE (ADULT SERVICES WORKROOM)	306	REVISE FLOOR-SUPPLIED AND WALL-MOUNTED POWER CONNECTIONS TO NEW FURNITURE			10
			REVISE FLOOR-SUPPLIED AND WALL-MOUNTED DATA CONNECTIONS TO NEW FURNITURE		8
				REVISE LIGHTING AND CONTROLS IN PRIVATE OFFICE	2
STAFF OFFICE (CREATIVE SERVICES)	304	REVISE FLOOR-SUPPLIED AND WALL-MOUNTED POWER CONNECTIONS TO NEW FURNITURE			4
			REVISE FLOOR-SUPPLIED AND WALL-MOUNTED DATA CONNECTIONS TO NEW FURNITURE		4
				EXISTING LIGHTING CONTROLS FOR WORKROOM AND ADJACENT AREAS TO REMAIN AS-IS	0

N

REV.	DATE	ISSUE
	8-14-15	ISSUE FOR BID AND PERMIT

DATE SIGNED:

Des Plaines Public Library
Phased Improvements

PROJECT NUMBER: 13300

ELECTRICAL SYMBOLS

E3.1

ELECTRICAL CONTRACTOR MUST VERIFY EXISTING CIRCUITS & CONNECTED LOADS ON ALL PANELBOARDS; REFER TO EXISTING PANEL SCHEDULES, AS-BUILT DRAWINGS AND FIELD CONDITIONS. DOCUMENT EXISTING, MODIFIED, ABANDONED AND NEW CIRCUITS ON PANELBOARD SCHEDULES.

PANEL: 2 CP

PROJECT: 2ND FLOOR
LOCATION: ELECTRICAL ROOM
VOLTAGE: 120 208
MAIN: 400
BUS: CU
MTG: SURFACE
PHASE: 3
WIRES: 4

DESCRIPTION	EQP	LTG	REC	CTV	VOLT-AMPS BUS A	VOLT-AMPS BUS B	VOLT-AMPS BUS C	BREAKER AMP	BREAKER POLE	CKT #	PHASES A	PHASES B	PHASES C	CKT #	BREAKER AMP	BREAKER POLE	VOLT-AMPS BUS A	VOLT-AMPS BUS B	VOLT-AMPS BUS C	EQP	LTG	REC	CTV	DESCRIPTION
ROOM 212			X					20	1	1	●			2	20	1						X		*STORYTIME RM 202*
ROOM 211			X					20	1	3		●		4	20	1						X		*STAFF OFFICE 204*
ROOM 210			X					20	1	5			●	6	20	1						X		*STAFF OFFICE 204*
R00M 209			X					20	1	7	●			8	20	1						X		*STAFF OFFICE 204*
ROOM 208			X					20	1	9		●		10	20	1						X		*STAFF OFF COPIER 204*
ROOM 205A			X					20	1	11			●	12	20	1						X		*STAFF OFFICE 204*
ROOM 205A			X					20	1	13	●			14	20	1						X		*STAFF OFFICE 204*
ROOM 215			X					20	1	15		●		16	20	1						X		*STAFF OFFICE 204*
ROOM 216			X					20	1	17			●	18	20	1						X		*SE COLLECTION AREA*
ROOM 217			X					20	1	19	●			20	20	1						X		*STAFF OFFICE 204*
TRAINING ROOM			X					20	1	21		●		22	20	1						X		*E COLLECTION AREA*
TRAINING RM FLR BOX			X					20	1	23			●	24	20	1			360			X		**CIRCULATION FLR**
TRAINING RM FLR BOX			X					20	1	25	●			26	20	1						X		*TRAINING RM. N COLECTN*
CIRCULATION FLR			X			360		20	1	27		●		28	20	1						X		*RM 217*
LAPTOP COLLECTN			X					20	1	29			●	30								X		
SW COLLECTION AREA			X					20	1	31	●			32	60	3						X		*SPARE (VIF)*
SW COLLECTION AREA			X					20	1	33		●		34								X		
CIRCULATION DESK			X					20	1	35			●	36	20	1						X		*SPARE (VIF)????*
CIRCULATION DESK			X					20	1	37	●			38								X		
CIRCULATION DESK			X					20	1	39		●		40	60	3						X		*TV SS*
EXISTING LOAD (VIF)???			X					20	1	41			●	42								X		

PANEL: 2 CP A

PROJECT: 2ND FLOOR
LOCATION: ELECTRICAL ROOM
VOLTAGE: 120 208
MAIN: 400
BUS: CU
MTG: SURFACE
PHASE: 3
WIRES: 4

DESCRIPTION	EQP	LTG	REC	CTV	VOLT-AMPS BUS A	VOLT-AMPS BUS B	VOLT-AMPS BUS C	BREAKER AMP	BREAKER POLE	CKT #	PHASES A	PHASES B	PHASES C	CKT #	BREAKER AMP	BREAKER POLE	VOLT-AMPS BUS A	VOLT-AMPS BUS B	VOLT-AMPS BUS C	EQP	LTG	REC	CTV	DESCRIPTION
N COLLECTION FLR BOX			X					20	1	1	●			2	20	1	360					X		**YOUTH 201 DESK**
N COLLECTION FLR BOX			X					20	1	3		●		4	20	1						X		*COLUMN B-3 FEED*
N COLLECTION FLR BOX			X					20	1	5			●	6	20	1						X		*COLUMN B-2 FEED*
N COLLECTION FLR BOX			X					20	1	7	●			8	20	1						X		*NE COLLECTN FLR BOX*
YOUTH 201 FLOOR			X			720		20	1	9		●		10	20	1						X		*NE COLLECTN FLR BOX*
YOUTH 201 FLOOR			X				720	20	1	11			●	12	20	1						X		*S COLLECTN FLR BOX*
S COLLECTION FLR BOX			X					20	1	13	●			14	20	1						X		*S COLLECTN FLR BOX*
S COLLECTION FLR BOX			X					20	1	15		●		16	20	1						X		*S COLLECTN FLR BOX*
S COLLECTION FLR BOX			X					20	1	17			●	18	20	1						X		*S COLLECTN FLR BOX*
N COLLECTION AREA			X					20	1	19	●			20	20	1						X		*RECEPT RM 205 FLR BX*
N COLLECTION AREA			X					20	1	21		●		22	20	1						X		*RECEPT RM 205 FLR BX*
N COLLECTION AREA			X					20	1	23			●	24	20	1						X		*TRACK LIGHTS*
COLUMN D-4 FEED			X					20	1	25	●			26	20	1						X		*NE COLLECTION AREA*
RIGHT OF SINK			X					20	1	27		●		28	20	1						X		*NE COLLECTION AREA*
LEFT OF SINK			X					20	1	29			●	30	20	1						X		*DEBIT CARD STATION*
LEFT OF SINK			X					20	1	31	●			32	20	1						X		*COLUMN C-3 FEED*
LEFT OF DISHWASHER			X					20	1	33		●		34	20	1						X		*OUTLET IN E.C.*
WEST KITCH MICROWAVE			X					20	1	35			●	36	20	1						X		*OUTLET IN E.C.*
YOUTH 201 FLOOR			X		720			20	1	37	●			38	20	1	540					X		**YOUTH 201**
YOUTH 201 FLOOR			X			720		20	1	39		●		40	20	1		540				X		**YOUTH 201**
YOUTH 201 FLOOR			X				720	20	1	41			●	42	20	1			720			X		**YOUTH 201 FLOOR**

PANEL: 3 CP

PROJECT: 3RD FLOOR
LOCATION: ELECTRICAL ROOM
VOLTAGE: 120 208
MAIN: 400
BUS: CU
MTG: SURFACE
PHASE: 3
WIRES: 4

DESCRIPTION	EQP	LTG	REC	CTV	VOLT-AMPS BUS A	VOLT-AMPS BUS B	VOLT-AMPS BUS C	BREAKER AMP	BREAKER POLE	CKT #	PHASES A	PHASES B	PHASES C	CKT #	BREAKER AMP	BREAKER POLE	VOLT-AMPS BUS A	VOLT-AMPS BUS B	VOLT-AMPS BUS C	EQP	LTG	REC	CTV	DESCRIPTION
COMMONS 303			X		720			20	1	1	●			2								X		
ROOM 304 COPIER			X					20	1	3		●		4		3						X		*TVSS*
ROOM 304 PRINTERS			X					20	1	5			●	6								X		
COMMONS 303			X		900			20	1	7	●			8								X		
PROJECTOR RM 303			X					20	1	9		●		10		3						X		*SPARE (VIF)*
RM 306 STAFF OFFICE			X					20	1	11			●	12								X		
RM 306 STAFF OFFICE			X					20	1	13	●			14	20	1						X		**CIRCULATION FLR**
RM 306A WORK AREA			X					20	1	15		●		16	20	1						X		*4TH FLR FLOOR OUTLET*
W WALL COLLECTION			X					20	1	17			●	18	20	1						X		**CIRCULATION FLR**
W WALL COLLECTION			X					20	1	19	●			20	20	1						X		*COLUMN B-3*
NW COLLECTION AREA			X					20	1	21		●		22	20	1						X		**CIRCULATION FLR**
SPARE (VIF) ???????			X					20	1	23			●	24	20	1						X		*CIRCULATION DESK*
NE COLLECTION AREA			X					20	1	25	●			26	20	1						X		**CIRCULATION FLR**
NE COLLECTION AREA			X					20	1	27		●		28	20	1						X		*CIRCULATION DESK*
E COLLECTION AREA			X					20	1	29			●	30	20	1						X		*CIRCULATION DESK*
RMS 301E 306 304 305			X					20	1	31	●			32	20	1						X		*COLUMN C-2*
RMS 301E 301D			X					20	1	33		●		34	20	1						X		*COLUMN C-3*
RM 306A WORK AREA			X					20	1	35			●	36	20	1						X		*COLUMN B-2*
RMS 301C 301B			X					20	1	37	●			38	20	1	540					X		**ADULT SERVICE 306**
4TH FLR FURNITURE			X					20	1	39		●		40	20	1		540				X		**ADULT SERVICE 306**
PROJECTOR RM 303			X				800	20	1	41			●	42	20	1						X		RM 306

PANEL: 1 CP

PROJECT: 1ST FLOOR
LOCATION: ELECTRICAL ROOM
VOLTAGE: 120 208
MAIN: 400
BUS: CU
MTG: SURFACE
PHASE: 3
WIRES: 4

DESCRIPTION	EQP	LTG	REC	CTV	VOLT-AMPS BUS A	VOLT-AMPS BUS B	VOLT-AMPS BUS C	BREAKER AMP	BREAKER POLE	CKT #	PHASES A	PHASES B	PHASES C	CKT #	BREAKER AMP	BREAKER POLE	VOLT-AMPS BUS A	VOLT-AMPS BUS B	VOLT-AMPS BUS C	EQP	LTG	REC	CTV	DESCRIPTION
WALL REC S WALL 108			X					20	1	1	●			2	20	1						X		*WALL RECEPT 108*
WALL REC S WALL 108			X					20	1	3		●		4	20	1						X		*WALL RECEPT 108*
RECEPT IN SHOWCASE			X					20	1	5			●	6	20	1						X		*WALL RECEPT 108*
SORTING RM OUTLET			X					20	1	7	●			8	20	1						X		*RECEPT 108*
REC AT COL D4 RM 108			X					20	1	9		●		10								X		
COPIER RM 108			X				**800**	20	1	11			●	12	60	3						X		*SUPPRESSION FILTER SYSTEM*
RECEPT/FURNITURE RM 108			X		**600**			20	1	13	●			14								X		
REC IN BKMOBILE GAR 118			X					20	1	15		●		16	20	1						X		*RECEPT E WALL 105*
REC RECEIVING RM 114			X					20	1	17			●	18	20	1						X		*RECEPT PROJ RM 106A 106*
REC MAINT OFFICE 115			X					20	1	19	●			20	20	1						X		*WALL RECEPT 101C*
REC MAINT WKRM 116			X					20	1	21		●		22	20	1						X		*WALL RECEPT 101C DOOR OPENER*
FURNITURE 108			X				**600**	20	1	23			●	24	20	1						X		*COPIER REC IN FLR 101*
REC IN FURN 101			X					20	1	25	●			26	20	1						X		*POWER AT MAIN DESK 101*
REC IN FURN 101			X					20	1	27		●		28	20	1						X		*POWER AT MAIN DESK 101*
REC IN FURN 101			X					20	1	29			●	30	20	1						X		*POWER AT MAIN DESK 101*
REC IN FURN 101			X					20	1	31	●			32	20	1						X		*POWER AT MAIN DESK 101*
REC IN FURN 101			X					20	1	33		●		34	20	1						X		*POWER AT MAIN DESK 101*
REC IN FURN 101			X					20	1	35			●	36	20	1						X		*POWER AT MAIN DESK 101*
REC IN FURN 101			X					20	1	37	●			38	20	1						X		*POWER AT MAIN DESK 101*
REC IN FURN 101			X					20	1	39		●		40	20	1						X		*SORTING RM OUTLET*
LOBBY SECURITY 101			X				**400**	20	1	41			●	42	20	1						X		*SORTING RM OUTLET*

PANEL: 1 CP A

PROJECT: 1ST FLOOR
LOCATION: ELECTRICAL ROOM
VOLTAGE: 120 208
MAIN: 400
BUS: CU
MTG: SURFACE
PHASE: 3
WIRES: 4

DESCRIPTION	EQP	LTG	REC	CTV	VOLT-AMPS BUS A	VOLT-AMPS BUS B	VOLT-AMPS BUS C	BREAKER AMP	BREAKER POLE	CKT #	PHASES A	PHASES B	PHASES C	CKT #	BREAKER AMP	BREAKER POLE	VOLT-AMPS BUS A	VOLT-AMPS BUS B	VOLT-AMPS BUS C	EQP	LTG	REC	CTV	DESCRIPTION
WALL RECEPT W 105			X					20	1	1	●			2	20	1						X		*RECEPT OFFICE 114*
WALL RECEPT W 105			X					20	1	3		●		4	20	1						X		*GARAGE DB DUPLX*
WALL RECEPT W 105			X					20	1	5			●	6	20	1						X		*111A*
WALL RECEPT W 105			X					20	1	7	●			8	20	1	900					X		**TECH SERVICE 111**
FLOOR RECEPT 105			X					20	1	9		●		10	20	1		900				X		**TECH SERVICE 111**
FLOOR RECEPT 105			X					20	1	11			●	12	20	1			900			X		**TECH SERVICE 111**
FLOOR RECEPT COLUMN E-3			X					20	1	13	●			14	20	1	900					X		**TECH SERVICE 111**
FLOOR RECEPT COLUMN E-3			X					20	1	15		●		16	20	1		900				X		**TECH SERVICE 111**
FLR OUTLET SECURITY DESK			X					20	1	17			●	18	20	1			900			X		**TECH SERVICE 111**
FURN RECEPT 108			X					20	1	19	●			20	20	1	900					X		**TECH SERVICE 111**
FURN RECEPT 108			X					20	1	21		●		22	20	1						X		*FURN RECEPT 108*
FURN RECEPT 108			X					20	1	23			●	24	20	1						X		*FURN RECEPT 108*
FURN RECEPT 108			X					20	1	25	●			26	20	1						X		*FURN RECEPT 108*
TECH SERVICE COPIER			X			800		20	1	27		●		28	20	1						X		*FURN RECEPT 108*
BKMOBILE WKRM 111A			X					20	1	29			●	30	20	1						X		*EXIST LOAD (VIF) ???*
TELECOM ROOM			X					20	1	31	●			32	20	1						X		*EXIST LOAD (VIF) ???*
IT WORKROOM			X					20	1	33		●		34	20	1						X		*EXIST LOAD (VIF) ???*
OFFICE 108n /108j			X				**900**	20	1	35			●	36	20	1						X		*EXIST LOAD (VIF) ???*
RECEPT IN ELEC CLOST			X					20	1	37	●			38								X		
RECEPT IN ELEC CLOST			X					20	1	39		●		40	20	3						X		*METER FEEDS*
OFFICE 108o			X				**900**	20	1	41			●	42								X		

PANEL: 3 CP A

PROJECT: 3RD FLOOR
LOCATION: ELECTRICAL ROOM
VOLTAGE: 120 208
MAIN: 400
BUS: CU
MTG: SURFACE
PHASE: 3
WIRES: 4

DESCRIPTION	EQP	LTG	REC	CTV	VOLT-AMPS BUS A	VOLT-AMPS BUS B	VOLT-AMPS BUS C	BREAKER AMP	BREAKER POLE	CKT #	PHASES A	PHASES B	PHASES C	CKT #	BREAKER AMP	BREAKER POLE	VOLT-AMPS BUS A	VOLT-AMPS BUS B	VOLT-AMPS BUS C	EQP	LTG	REC	CTV	DESCRIPTION
ADULT SERVICE 306			X		720			20	1	1	●			2	20	1	720					X		**ADULT SERVICE 306**
ADULT SERVICE 306			X			720		20	1	3		●		4	20	1		720				X		**ADULT SERVICE 306**
ADULT SERVICE 306			X				540	20	1	5			●	6	20	1			720			X		**ADULT SERVICE 306**
ADULT SERVICE 306			X		540			20	1	7	●			8	20	1	720					X		**ADULT SERVICE 306**
OFFICE 306a			X			900		20	1	9		●		10	20	1		720				X		**ADULT SERVICE 306**
ADULT SERVICE 306			X				720	20	1	11			●	12	20	1						X		*NW COLLECT FLR BOXES*
CREATIVE SERVICE 304			X		720			20	1	13	●			14	20	1	720					X		**CREATIVE SERVICE 304**
CREATIVE SERVICE 304			X			360		20	1	15		●		16	20	1		720				X		**CREATIVE SERVICE 304**
CREATIVE SERVICE 304			X				720	20	1	17			●	18	20	1						X		*COLUMN C-D2 FLR BOXES*
W COLLECTION AREA			X					20	1	19	●			20	20	1						X		*N COLLECTION AREA*
W COLLECTION AREA			X					20	1	21		●		22	20	1						X		*N COLLECTION AREA*
W COLLECTION AREA			X					20	1	23			●	24	20	1						X		*N COLLECTION AREA*
COLLECTION FLR BOXES			X					20	1	25	●			26	20	1						X		*NW COLLECTION AREA*
COLLECTION FLR BOXES			X					20	1	27		●		28	20	1		720				X		**CIRCULATION FLR**
COLLECTION FLR BOXES			X					20	1	29			●	30	20	1			720			X		**CIRCULATION FLR**
HERMITAGE RM FLR BX			X					20	1	31	●			32	20	1	720					X		**CIRCULATION FLR**
CREATIVE SERVICE 304			X			540		20	1	33		●		34	20	1		720				X		**CIRCULATION FLR**
COMMONS 303 FLR			X				720	20	1	35			●	36	20	1						X		*RM 303*
COMMONS 303 FLR			X		720			20	1	37	●			38	20	1						X		*RM 303*
COMMONS 303 FLR			X			720		20	1	39		●		40	20	1		720				X		**CREATIVE SERVICE 304**
COMMONS 303 FLR			X				720	20	1	41			●	42	20	1			360			X		**CREATIVE SERVICE 304**

ARCHITECTURE PLANNING INTERIORS
LOHAN ANDERSON

DES PLAINES PUBLIC LIBRARY, OWNER
1501 ELLINWOOD ST., DES PLAINES, IL 60016

LOHAN ANDERSON, ARCH./INT.
401 N. MICHIGAN AVE., CHICAGO, IL 60611

CALOR DESIGN GROUP, LTD., MEP/FP
2217 N. WESTERN AVE., CHICAGO, IL 60647

C. S. ASSOCIATES, INC., STRUC.
4532 W. 103RD ST., OAK LAWN, IL 60453

N

REV.	DATE	ISSUE
	8-14-15	ISSUE FOR BID AND PERMIT

DATE SIGNED:

Des Plaines Public Library
Phased Improvements

PROJECT NUMBER: 13300

ELECTRICAL SCHEDULES

E4.1

ELECTRICAL CONTRACTOR MUST VERIFY EXISTING CIRCUITS & CONNECTED LOADS ON ALL PANELBOARDS; REFER TO EXISTING PANEL SCHEDULES, AS-BUILT DRAWINGS AND FIELD CONDITIONS. DOCUMENT EXISTING, MODIFIED, ABANDONED AND NEW CIRCUITS ON PANELBOARD SCHEDULES.

PANEL: 2 LP

PROJECT: 2ND FLOOR | MAIN: 100
LOCATION: ELECTRICAL ROOM | BUS: CU | PHASE: 3
MTG: SURFACE | WIRES: 4
VOLTAGE: 277 480

DESCRIPTION	EQP	LTG	REC	CTV	VOLT-AMPS BUS A	VOLT-AMPS BUS B	VOLT-AMPS BUS C	BREAKER AMP	BREAKER POLE	CKT #	PHASES A	PHASES B	PHASES C	CKT #	BREAKER AMP	BREAKER POLE	VOLT-AMPS BUS A	VOLT-AMPS BUS B	VOLT-AMPS BUS C	EQP	LTG	REC	CTV	DESCRIPTION
GENERAL LIGHTING		X						20	1	1	●			2	20	1					X			*GENERAL LIGHTING*
GENERAL LIGHTING		X						20	1	3		●		4	20	1					X			*RMS 208 209 210 212 214 214 203E 206*
GENERAL LIGHTING		X						20	1	5			●	6	20	1					X			*RMS 205 205 D 215 216 217 218*
CENTRAL DOWNLIGHTS		X						20	1	7	●			8	20	1					X			*RMS 2031, 203B 203C 202 202A 202B*
PERIMETER N DOWN LTS		X						20	1	9		●		10	20	1					X			*ROOM 204*
PERIMETER E DOWN LTS		X						20	1	11			●	12	20	1					X			*SPARE (VIF)*
PERIMETER S DOWN & W/W		X						20	1	13	●			14	20	1					X			*EXIT SIGNS*
GENERAL LIGHTING		X						20	1	15		●		16	20	1					X			*EMERGENCY LIGHTS*
NEW CORRIDOR LTG 207								20	1	17			●	18	20	1								*SPARE (VIF)*
SPARE (VIF)								20	1	19	●			20	20	1								*SPARE (VIF)*
SPARE (VIF)								20	1	21		●		22	20	1								*SPARE (VIF)*
SPARE (VIF)								20	1	23			●	24	20	1								*SPARE (VIF)*
SPARE (VIF)								20	1	25	●			26	20	1								*SPARE (VIF)*
SPARE (VIF)								20	1	27		●		28	20	1								*SPARE (VIF)*
SPARE (VIF)								20	1	29			●	30	20	1								*SPARE (VIF)*
SPACE (VIF)										31	●			32										*SPACE (VIF)*
SPACE (VIF)										33		●		34										*SPACE (VIF)*
SPACE (VIF)								20	1	35			●	36										*SPACE (VIF)*
SPACE (VIF)										37	●			38										*SPACE (VIF)*
SPACE (VIF)										39		●		40										*SPACE (VIF)*
SPACE (VIF)										41			●	42										*SPACE (VIF)*

PANEL: 3 LP

PROJECT: 3RD FLOOR | MAIN: 100
LOCATION: ELECTRICAL ROOM | BUS: CU | PHASE: 3
MTG: SURFACE | WIRES: 4
VOLTAGE: 277 480

DESCRIPTION	EQP	LTG	REC	CTV	VOLT-AMPS BUS A	VOLT-AMPS BUS B	VOLT-AMPS BUS C	BREAKER AMP	BREAKER POLE	CKT #	PHASES A	PHASES B	PHASES C	CKT #	BREAKER AMP	BREAKER POLE	VOLT-AMPS BUS A	VOLT-AMPS BUS B	VOLT-AMPS BUS C	EQP	LTG	REC	CTV	DESCRIPTION
GEN LTS COLLECT AREA		X						20	1	1	●			2	20	1					X			*GEN LTS COLLECT AREA*
GEN LTS COLLECT AREA		X						20	1	3		●		4	20	1					X			*GEN LTS COLLECT AREA*
GEN LTS COLLECT AREA		X						20	1	5			●	6	20	1					X			*CENTRAL DOWNLIGHTS*
CENTRAL DOWN COLL AREA		X						20	1	7	●			8	20	1					X			*PERIMETER W DOWN LTS*
RMS 306, 306A, 301S, 301E		X						20	1	9		●		10	20	1					X			*PERIMETER S DOWN W/W*
RMS 303 304 301B 301C 305A 305B		X						20	1	11			●	12	20	1					X			*PERIMETER E DOWN LTS*
DOWNLT N COLL AREA		X						20	1	13	●			14	20	1					X			*EXIT SIGNS*
COLLECTION AREA		X						20	1	15		●		16	20	1					X			*EMERGENCY LIGHTS*
COMMONS LTG		X						20	1	17			●	18	20	1								*SPARE (VIF)*
COMMONS LTG		X						20	1	19	●			20	20	1								*SPARE (VIF)*
SPARE (VIF)								20	1	21		●		22	20	1								*SPARE (VIF)*
SPARE (VIF)								20	1	23			●	24	20	1								*SPARE (VIF)*
SPARE (VIF)								20	1	25	●			26	20	1								*SPARE (VIF)*
SPARE (VIF)								20	1	27		●		28	20	1								*SPARE (VIF)*
SPARE (VIF)								20	1	29			●	30	20	1								*SPARE (VIF)*
SPACE (VIF)										31	●			32										*SPACE (VIF)*
SPACE (VIF)										33		●		34										*SPACE (VIF)*
SPACE (VIF)								20	1	35			●	36										*SPACE (VIF)*
SPACE (VIF)										37	●			38										*SPACE (VIF)*
SPACE (VIF)										39		●		40										*SPACE (VIF)*
SPACE (VIF)										41			●	42										*SPACE (VIF)*

PANEL: 4 LP

PROJECT: 4TH FLOOR | MAIN: 100
LOCATION: ELECTRICAL ROOM | BUS: CU | PHASE: 3
MTG: SURFACE | WIRES: 4
VOLTAGE: 277 480

DESCRIPTION	EQP	LTG	REC	CTV	VOLT-AMPS BUS A	VOLT-AMPS BUS B	VOLT-AMPS BUS C	BREAKER AMP	BREAKER POLE	CKT #	PHASES A	PHASES B	PHASES C	CKT #	BREAKER AMP	BREAKER POLE	VOLT-AMPS BUS A	VOLT-AMPS BUS B	VOLT-AMPS BUS C	EQP	LTG	REC	CTV	DESCRIPTION
GENERAL LIGHTING (VIF)		X						20	1	1	●			2	20	1					X			*GENERAL LIGHTING (VIF)*
GENERAL LIGHTING (VIF)		X						20	1	3		●		4	20	1					X			*INDIRECT LIGHTING*
GENERAL LIGHTING (VIF)		X						20	1	5			●	6	20	1					X			*INDIRECT LIGHTING*
CENTRAL DOWNLIGHTS(VIF)		X						20	1	7	●			8	20	1					X			*PERIMETER W DOWN LT*
CENTRAL DOWNLIGHTS(VIF)		X						20	1	9		●		10	20	1					X			*PERIMETER S DOWN WASH*
COOLING TOWER LIGHTS		X						20	1	11			●	12	20	1					X			*PERIMETER E DOWN LTS*
RMS 401b,c,d, 403		X						20	1	13	●			14	20	1					X			*EXIT SIGNS*
RMS 405A,B,C, 406		X						20	1	15		●		16	20	1					X			*EMERGENCY LIGHTS*
GENERAL LIGHTING (VIF)		X						20	1	17			●	18	20	1								*SPARE (VIF)*
SPARE (VIF)								20	1	19	●			20	20	1								*SPARE (VIF)*
SPARE (VIF)								20	1	21		●		22	20	1								*SPARE (VIF)*
SPARE (VIF)								20	1	23			●	24	20	1								*SPARE (VIF)*
SPARE (VIF)								20	1	25	●			26	20	1								*SPARE (VIF)*
SPARE (VIF)								20	1	27		●		28	20	1								*SPARE (VIF)*
SPARE (VIF)								20	1	29			●	30	20	1								*SPARE (VIF)*
SPACE (VIF)										31	●			32										*SPACE (VIF)*
SPACE (VIF)										33		●		34										*SPACE (VIF)*
SPACE (VIF)								20	1	35			●	36										*SPACE (VIF)*
SPACE (VIF)										37	●			38										*SPACE (VIF)*
SPACE (VIF)										39		●		40										*SPACE (VIF)*
SPACE (VIF)										41			●	42										*SPACE (VIF)*

PANEL: 4 CP

PROJECT: 4TH FLOOR | MAIN: 400
LOCATION: ELECTRICAL ROOM | BUS: CU | PHASE: 3
MTG: SURFACE | WIRES: 4
VOLTAGE: 120 208

DESCRIPTION	EQP	LTG	REC	CTV	VOLT-AMPS BUS A	VOLT-AMPS BUS B	VOLT-AMPS BUS C	BREAKER AMP	BREAKER POLE	CKT #	PHASES A	PHASES B	PHASES C	CKT #	BREAKER AMP	BREAKER POLE	VOLT-AMPS BUS A	VOLT-AMPS BUS B	VOLT-AMPS BUS C	EQP	LTG	REC	CTV	DESCRIPTION
VESTIBULE 402			X					20	1	1	●			2	20	1	720					X		**COMPUTER LAB**
COMPUTER LAB			X			900		20	1	3		●		4	20	1		720				X		**COMPUTER LAB**
COMPUTER LAB			X				900	20	1	5			●	6	20	1						X		*COMPUTER LAB (PROJ.)*
COMPUTER LAB			X					20	1	7	●			8	20	1	900					X		**FORUM FLR**
COMPUTER LAB FLR BOX			X					20	1	9		●		10	20	1						X		*STAFF WORK ROOM*
COMPUTER LAB FLR BOX			X					20	1	11			●	12	20	1						X		*STAFF WORK ROOM*
COLLECTION AREA			X					20	1	13	●			14	20	1						X		*STAFF WORK ROOM*
FORUM FLR			X			900		20	1	15		●		16	20	1						X		*COLLECTION AREA*
FORUM FLR			X				900	20	1	17			●	18	20	1						X		*COLLECTION AREA*
WORK CENTER 406			X		800			20	1	19	●			20	20	1						X		*COLLECTION AREA*
WORK CENTER 406			X			800		20	1	21		●		22	20	1						X		*COLLECTION AREA*
WORK CENTER 406			X				800	20	1	23			●	24	20	1						X		*COLLECTION AREA*
WORK CENTER 406			X		800			20	1	25	●			26	20	1	720					X		**SUPPLY RM 406b**
INFO DESK			X					20	1	27		●		28	20	1		900				X		**FORUM FLR**
INFO DESK			X					20	1	29			●	30	20	1						X		*COLUMN B3*
INFO DESK			X					20	1	31	●			32	20	1						X		*COLUMN C3*
INFO DESK			X					20	1	33		●		34	20	1						X		*COLUMN C2*
			X							35			●	36	20	1						X		*COLUMN B2 AND HUB*
TV SS			X						3	37	●			38	20	1	900					X		**FORUM FLR**
			X							39		●		40	20	1		900				X		**FORUM FLR**
FORUM FLR			X			900		20	1	41			●	42	20	1			900			X		**FORUM FLR**

PANEL: 4 CP A

PROJECT: 4TH FLOOR | MAIN: 400
LOCATION: ELECTRICAL ROOM | BUS: CU | PHASE: 3
MTG: SURFACE | WIRES: 4
VOLTAGE: 120 208

DESCRIPTION	EQP	LTG	REC	CTV	VOLT-AMPS BUS A	VOLT-AMPS BUS B	VOLT-AMPS BUS C	BREAKER AMP	BREAKER POLE	CKT #	PHASES A	PHASES B	PHASES C	CKT #	BREAKER AMP	BREAKER POLE	VOLT-AMPS BUS A	VOLT-AMPS BUS B	VOLT-AMPS BUS C	EQP	LTG	REC	CTV	DESCRIPTION
COLLECTION AREA			X					20	1	1	●			2	20	1						X		*COLLECTION AREA*
COLLECTION AREA			X					20	1	3		●		4	20	1						X		*COLLECTION AREA*
COLLECTION AREA			X					20	1	5			●	6	20	1						X		*COLLECTION AREA*
COLLECTION AREA			X					20	1	7	●			8	20	1???						X		*COMPUTER TABLE 1*
COLLECTION AREA			X					20	1	9		●		10	20	1???						X		*COMPUTER TABLE 1*
COLLECTION AREA			X					20	1	11			●	12	20	1???						X		*COMPUTER TABLE 1*
COLLECTION AREA			X					20	1	13	●			14	20	1???						X		*COMPUTER TABLE 2*
COLLECTION AREA			X					20	1	15		●		16	20	1???						X		*COMPUTER TABLE 2*
READING ROOMS			X					20	1	17			●	18	20	1???						X		*COMPUTER TABLE 2*
READING ROOMS			X					20	1	19	●			20	20	1???						X		*3RD FLR WIRELESS CAM*
READING ROOMS			X					20	1	21		●		22	20	1???						X		*COMPUTER TABLE 6*
READING ROOMS			X					20	1	23			●	24	20	1???						X		*COMPUTER TABLE 6*
COMPUTER TABLE 4			X					20	1???	25	●			26	20	1						X		*SERVER ROOM*
COMPUTER TABLE 4			X					20	1???	27		●		28	20	1						X		*SERVER ROOM*
COMPUTER TABLE 4			X					20	1???	29			●	30	20	1						X		*SERVER ROOM*
COMPUTER TABLE 5			X					20	1???	31	●			32	100	2						X		*UPS SERVER ROOM*
COMPUTER TABLE 5			X					20	1???	33		●		34								X		
COMPUTER TABLE 5			X					20	1???	35			●	36	20	1						X		*N/W 3RD FLR CAMERAS 4TH FLR FLR OUTLETS*
COMPUTER TABLE 7			X					20	1???	37	●			38	20	1	1000					X		**FORUM PROJECTOR**
COMPUTER TABLE 7			X					20	1???	39		●		40	20	1		1000				X		**FORUM PROJECTOR**
COMPUTER TABLE 7			X					20	1???	41			●	42	20	1			1000			X		**FORUM PROJECTOR**

PANEL: 1 LP

PROJECT: 1ST FLOOR | MAIN: 100
LOCATION: ELECTRICAL ROOM | BUS: CU | PHASE: 3
MTG: SURFACE | WIRES: 4
VOLTAGE: 277 480

DESCRIPTION	EQP	LTG	REC	CTV	VOLT-AMPS BUS A	VOLT-AMPS BUS B	VOLT-AMPS BUS C	BREAKER AMP	BREAKER POLE	CKT #	PHASES A	PHASES B	PHASES C	CKT #	BREAKER AMP	BREAKER POLE	VOLT-AMPS BUS A	VOLT-AMPS BUS B	VOLT-AMPS BUS C	EQP	LTG	REC	CTV	DESCRIPTION
SE LIGHTING		X						20	1	1	●			2	20	1					X			*VESTIBULE LIGHTS*
SE BATH MECH RM LTG		X						20	1	3		●		4	20	1					X			*LOBBY CORR LIGHTS*
S LIGHTING		X						20	1	5			●	6	20	1					X			*PANTRY LIGHTING*
1ST FLR EM LIGHTING		X						20	1	7	●			8	20	1					X			*STORE RM RMS 105G, C*
1ST FLR EM LIGHTING		X						20	1	9		●		10	20	1					X			*SPARE (VIF)*
SPACE (VIF)		X						20	1	11			●	12	20	1					X			*ATRIUM LIGHTING*
ATRIUM STAIR 3 LIGHTS		X						20	1	13	●			14	20	1					X			*ATRIUM LIGHTING N & S*
S & SE OUTSDIE LIGHTS		X						20	1	15		●		16	20	1					X			*ATRIUM LIGHTING EAST*
NW OUTSIDE LIGHTS		X						20	1	17			●	18	20	1								*SPARE (VIF)*
N OUTSIDE LIGHTS		X						20	1	19	●			20	20	1								*SPARE (VIF)*
NEW 103 CORRIDOR LIGHTING								20	1	21		●		22	20	1								*SPARE (VIF)*
TECH SERVICE 111								20	1	23			●	24	20	1								*SPARE (VIF)*
SPARE (VIF)								20	1	25	●			26	20	1								*SPARE (VIF)*
SPARE (VIF)								20	1	27		●		28	20	1								*SPARE (VIF)*
SPARE (VIF)								20	1	29			●	30	20	1								*SPARE (VIF)*
SPACE (VIF)										31	●			32										*480 VOLT METERING*
SPACE (VIF)										33		●		34		3								
SPACE (VIF)								20	1	35			●	36										
SPACE (VIF)										37	●			38										*SPACE (VIF)*
SPACE (VIF)										39		●		40										*SPACE (VIF)*
SPACE (VIF)										41			●	42										*SPACE (VIF)*

ARCHITECTURE PLANNING INTERIORS
LOHAN ANDERSON

DES PLAINES PUBLIC LIBRARY, OWNER
1501 ELLINWOOD ST., DES PLAINES, IL 60016

LOHAN ANDERSON, ARCH./INT.
401 N. MICHIGAN AVE., CHICAGO, IL 60611

CALOR DESIGN GROUP, LTD., MEP/FP
2217 N. WESTERN AVE., CHICAGO, IL 60647

C. S. ASSOCIATES, INC., STRUC.
4532 W. 103RD ST., OAK LAWN, IL 60453

N

REV.	DATE	ISSUE
	8-14-15	ISSUE FOR BID AND PERMIT

DATE SIGNED:

Des Plaines Public Library
Phased Improvements

PROJECT NUMBER: 13300

ELECTRICAL SCHEDULES

E4.2

ARCHITECTURE PLANNING INTERIORS

LOHAN ANDERSON

LIGHTING FIXTURE SCHEDULE

TYPE (OPTION)	FIXTURE DESCRIPTION	MOUNTING	MANUFACTURER	PRODUCT/CATALOG NUMBER	LAMP(S)	WATTS/ LAMP	WATTS/ FIXTURE	REMARKS
F1	LINEAR PENDANT - DIRECT/INDIRECT	SUSPENDED	LUMENWERX	VIA4PDIPAT-HLO-LED-80-750-500-35-X-LEV-90-UNV-LE H/5-2-53WAC36-W-n/a-DC	LED	18 W/FT	18 W/FT	277 VOLT, 1 PHASE, (UNIVERSAL VOLTAGE); CONFIGURED IN CUSTOM RECTANGULAR ASSEMBLIES; REFER TO DRAWINGS FOR DIMENSIONS. PROVIDE WITH LUTRON ECOSYSTEM DIMMING BALLAST & GRAFIK EYE CONTROLS.
F2	CIRCULAR PENDANT - DIRECT/INDIRECT	SUSPENDED	G LIGHTING	SELENE: GL-2581-B-X-1-D	LED	104 WATTS	104 WATTS	COLOR OF POWDER COAT FINISH TO BE SELECTED BY ARCHITECT UPON REVIEW OF SUBMITTED SAMPLES. FOR THE DIAMETER OF FIXTURE SEE ARCHL DRAWINGS.
F3 (A)	LINEAR WALLWASHER	RECESSED	LEDALITE	TRUGROOVE: 39S8-L-B-E-Q-S-1-02-1-2-E	LED	10.0 W/FT	20 WATTS	277 VOLT, 1 PHASE, (UNIVERSAL VOLTAGE); FINISHES BY ARCHITECT.
F3 (B)	LINEAR WALLWASHER	RECESSED	FINELITE	HPW-LED: HPW-LED-2'-FR-LED-3500K-X-SC-C2	LED	10.0 W/FT	20 WATTS	277 VOLT, 1 PHASE, (UNIVERSAL VOLTAGE); FINISHES BY ARCHITECT.
F3 (C)	LINEAR WALLWASHER	RECESSED	PINNACLE	EDGE EVOLUTION: EV3WW-35HO-2-G9G-UNV-1C-W	LED	10.0 W/FT	20 WATTS	277 VOLT, 1 PHASE, (UNIVERSAL VOLTAGE); FINISHES BY ARCHITECT.
F4	2X2 PARABOLIC	RECESSED	LIGHTOLIER	ORIGINAL MODEL: EDA2G9; DPSG9PS2 6U UNV (VERIFY EXISTING TO MATCH)	T8 U, 3500K	34 WATT	34 WATT	277 VOLT, 1 PHASE; TO MATCH EXISTING, 9 CELL DEEP PARABOLIC
(F4) R	2X2 PARABOLIC	RECESSED	LIGHTOLIER	ORIGINAL MODEL: EDA2G9	T8 U, 3500K	34 WATT	34 WATT	DISCONNECT, REMOVE, PROTECT & RELOCATE EXISTING 2 X 2 FIXTURE
EXIT LIGHT	EXIT LIGHT	CEILING OR WALL	SURELITE	TPX -7 -70 277 VOLT, 1 PHASE, VERIFY EXISTING TO MATCH)	LED	7 WATTS	7 WATTS	RED LETTERS, BRUSHED ALUMINUM TO MATCH EXISTING,
EM LIGHT	EMERGENCY LIGHT	RECESSED CEILING	SURELITE	GC15082CL V SD 277 VOLT, 1 PHASE	(2) 12 WATT HALOGEN	12 WATT	24 WATTS	VOLTMETER, SELF-DIOGNOSTICS
F5	DOWN LIGHT	RECESSED	LIGHTOLIER	LIGHTOLIER 8020 // 8021 CALCULITE 277 VOLT, 1 PHASE	CFL (1) 32 W TRIPLE TUBE 4 PIN	32 WATTS	32 WATTS	TO MATCH EXISTING
(F5) R	DOWN LIGHT	RECESSED	LIGHTOLIER	LIGHTOLIER 8020 // 8021 CALCULITE 277 VOLT, 1 PHASE	CFL (1) 32 W TRIPLE TUBE 4 PIN	32 WATTS	32 WATTS	DISCONNECT, REMOVE, PROTECT & RELOCATE EXISTING FIXTURE

NOTE THAT THIS SCHEDULE ON THE ELECTRICAL DRAWINGS IS FOR GENERAL REFERENCE ONLY. SEE ARCHITECTURAL LIGHTING FIXTURE SCHEDULE FOR EXACT REQUIREMENTS.

NOTE: ALL CEILING MOUNTED FIXTURES MUST BE PLENUM RATED.

NOTE: ALL 277 VOLT LIGHT FIXTURES MUST BE CONTROLLED VIA EXISTING LIGHTING CONTROL PANELBOARDS, WITH COMPATIBLE ROOM AND CENTRAL CONTROL SWITCHING.

NOTE: VERIFY CEILING COMPATIBILITY, MOUNTING CONDITIONS, CLEARANCES AND STRUCTURAL SUSPENSION SYSTEM PRIOR TO FIXTURE PROCUREMENT.

PANEL: 1 MP

PROJECT:	1ST FLOOR	MAIN:	200		
LOCATION:	BOILER ROOM	BUS:	CU	PHASE:	3
		MTG:	SURFACE	WIRES:	4
VOLTAGE:	120 208				

DESCRIPTION	EQP	LTG	REC	CTV	VOLT-AMPS BUS A	VOLT-AMPS BUS B	VOLT-AMPS BUS C	BREAKER AMP	BREAKER POLE	CKT #	PHASES A	PHASES B	PHASES C	CKT #	BREAKER AMP	BREAKER POLE	VOLT-AMPS BUS A	VOLT-AMPS BUS B	VOLT-AMPS BUS C	EQP	LTG	REC	CTV	DESCRIPTION
FPB1.1 FPB1.3								20	1	1	●			2	20	1								*FPB1.4 FPB1.5*
FPB1.2								20	1	3		●		4	20	1								*SPARE (VIF)*
EXISTING LOAD (VIF) ???								20	1	5			●	6	20	1								*LAWN IRRIGATION PUMP*
EXISTING LOAD (VIF) ???								20	1	7	●			8	20	1								*FREIGHT SUMP PUMP*
CUH-1									2	9		●		10		2								*CUH-2*
										11			●	12										
BB1.2									2	13	●			14		2								*BB3.4*
										15		●		16										
BB5.6									2	17			●	18		2								*BB7.8*
										19	●			20										
EXISTING LOAD (VIF) SP-1 PASS ELEV PIT ???								20	1	21		●		22	20									*HUMIDIFIER*
NEW FPB							200	20	1	23			●	24	20									*GLYCOL PUMP*
SPARE (VIF)								20	1	25	●			26	20									*RP-1 IN MECH RM*
SPARE (VIF)								20	1	27		●		28	20									*BOILER PUMP CIRC*
UH-1 UH-2 BKMOBILE GARAGE								20	1	29			●	30	20									*BOILER PUMP CIRC*

NEW AND MODIFIED RELAYS AND CONTROLS AS NOTED. VERIFY EXACT PANEL CONDITIONS.

ELECTRICAL CONTRACTOR MUST VERIFY EXISTING CIRCUITS & CONNECTED LOADS ON ALL PANELBOARDS; REFER TO EXISTING PANEL SCHEDULES, AS-BUILT DRAWINGS AND FIELD CONDITIONS. DOCUMENT EXISTING, MODIFIED, ABANDONED AND NEW CIRCUITS ON PANELBOARD SCHEDULES.

DES PLAINES PUBLIC LIBRARY, OWNER
1501 ELLINWOOD ST., DES PLAINES, IL 60016

LOHAN ANDERSON, ARCH./INT.
401 N. MICHIGAN AVE., CHICAGO, IL 60611

CALOR DESIGN GROUP, LTD., MEP/FP
2217 N. WESTERN AVE., CHICAGO, IL 60647

C. S. ASSOCIATES, INC., STRUC.
4532 W. 103RD ST., OAK LAWN, IL 60453

N

REV.	DATE	ISSUE
	8-14-15	ISSUE FOR BID AND PERMIT

DATE SIGNED:

Des Plaines Public Library
Phased Improvements

PROJECT NUMBER: 13300

ELECTRICAL SCHEDULES

E4.3

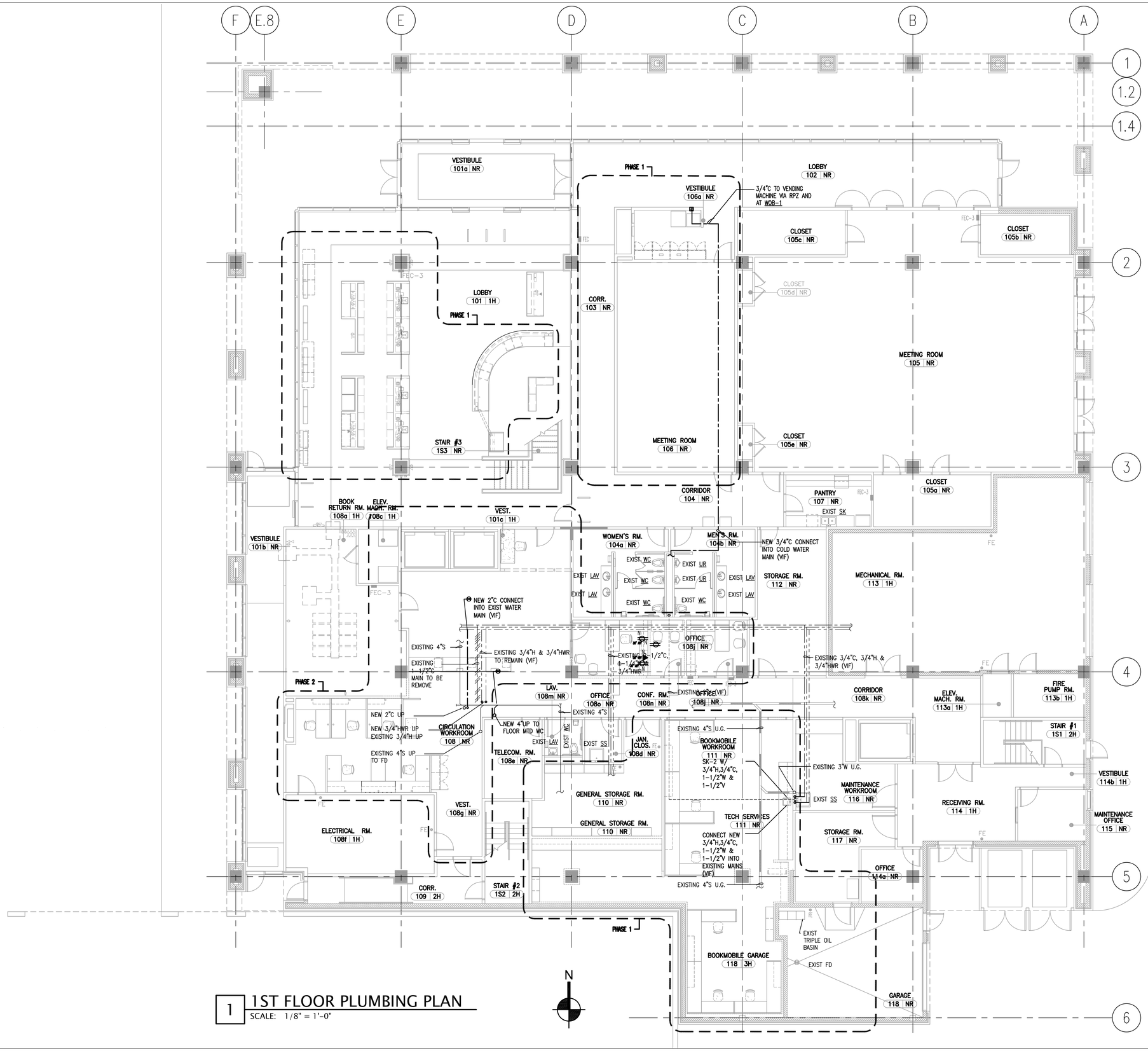

1 1ST FLOOR PLUMBING PLAN
SCALE: 1/8" = 1'-0"

ARCHITECTURE PLANNING INTERIORS
LOHAN ANDERSON

DES PLAINES PUBLIC LIBRARY, OWNER
1501 ELLINWOOD ST., DES PLAINES, IL 60016

LOHAN ANDERSON, ARCH./INT.
401 N. MICHIGAN AVE., CHICAGO, IL 60611

CALOR DESIGN GROUP, LTD., MEP/FP
2217 N. WESTERN AVE., CHICAGO, IL 60647

C. S. ASSOCIATES, INC., STRUC.
4532 W. 103RD ST., OAK LAWN, IL 60453

REV.	DATE	ISSUE
	8-7-15	CHECK SET

DATE SIGNED:

Des Plaines Public Library
Phased Improvements

PROJECT NUMBER: 13300

1ST FLOOR
PLUMBING PLAN

P1.1

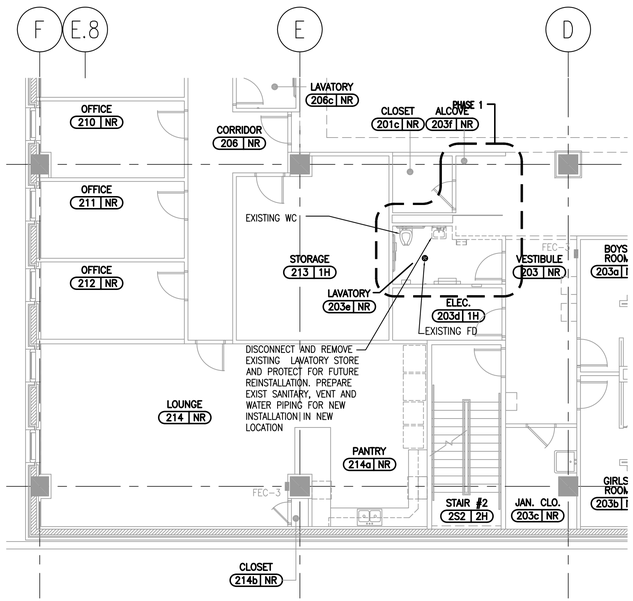

2 PARTIAL 2ND FLOOR PLUMBING PLAN – DEMO

SCALE: 1/8" = 1'-0"

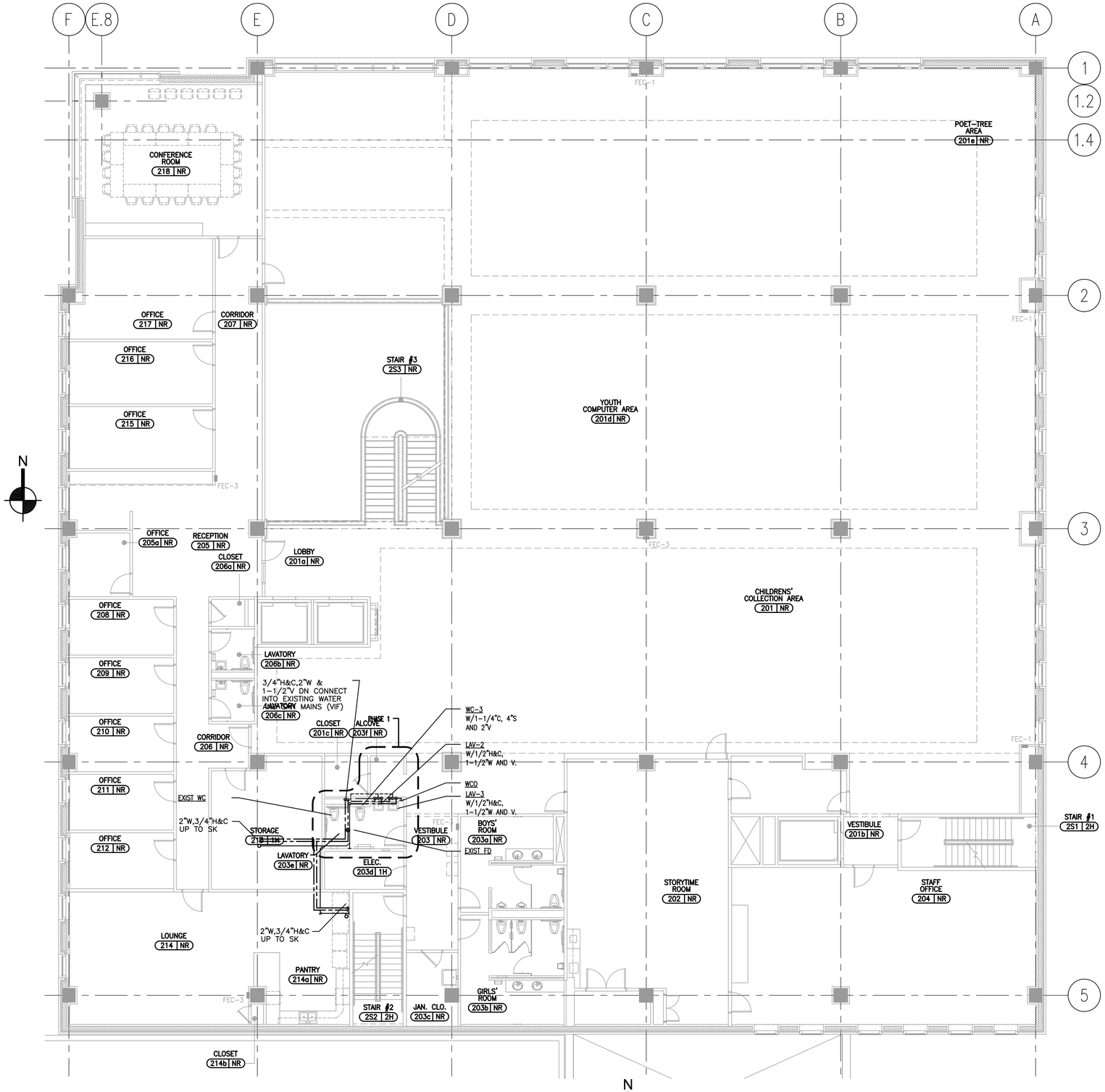

1 2ND FLOOR PLUMBING PLAN – NEW

SCALE: 1/8" = 1'-0"

ARCHITECTURE PLANNING INTERIORS

LOHAN ANDERSON

DES PLAINES PUBLIC LIBRARY, OWNER
1501 ELLINWOOD ST., DES PLAINES, IL 60016

LOHAN ANDERSON, ARCH./INT.
401 N. MICHIGAN AVE., CHICAGO, IL 60611

CALOR DESIGN GROUP, LTD., MEP/FP
2217 N. WESTERN AVE., CHICAGO, IL 60647

C. S. ASSOCIATES, INC., STRUC.
4532 W. 103RD ST., OAK LAWN, IL 60453

REV.	DATE	ISSUE
	8-7-15	CHECK SET

DATE SIGNED:

Des Plaines Public Library
Phased Improvements

PROJECT NUMBER: 13300

2ND FLOOR PLUMBING PLAN

P1.2

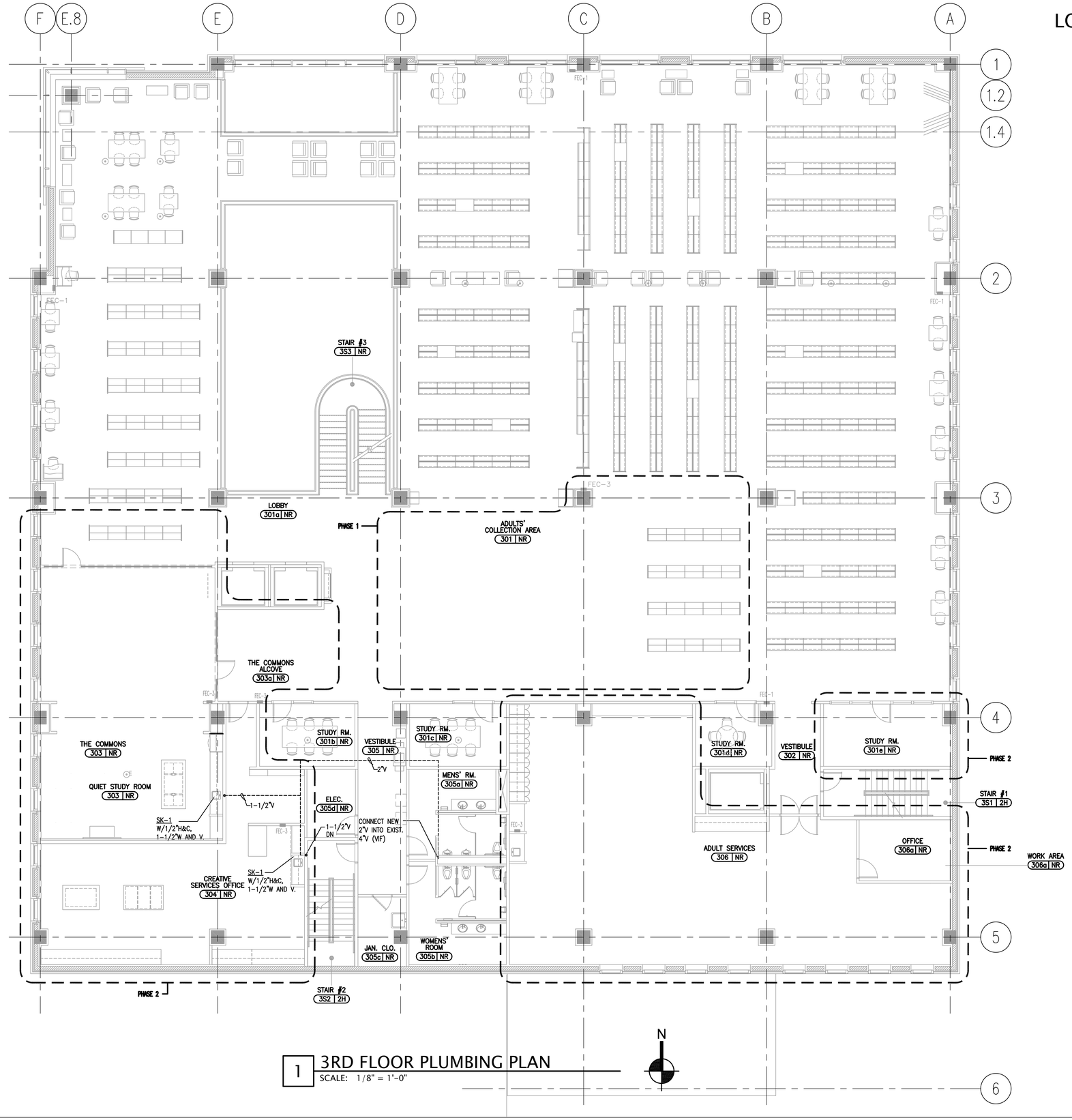

1 3RD FLOOR PLUMBING PLAN
SCALE: 1/8" = 1'-0"

ARCHITECTURE PLANNING INTERIORS
LOHAN ANDERSON

DES PLAINES PUBLIC LIBRARY, OWNER
1501 ELLINWOOD ST., DES PLAINES, IL 60016

LOHAN ANDERSON, ARCH./INT.
401 N. MICHIGAN AVE., CHICAGO, IL 60611

CALOR DESIGN GROUP, LTD., MEP/FP
2217 N. WESTERN AVE., CHICAGO, IL 60647

C. S. ASSOCIATES, INC., STRUC.
4532 W. 103RD ST., OAK LAWN, IL 60453

REV.	DATE	ISSUE
	8-7-15	CHECK SET

DATE SIGNED:

Des Plaines Public Library
Phased Improvements

PROJECT NUMBER: 13300

3RD FLOOR PLUMBING PLAN

P1.3

ARCHITECTURE PLANNING INTERIORS
LOHAN ANDERSON

DES PLAINES PUBLIC LIBRARY, OWNER
1501 ELLINWOOD ST., DES PLAINES, IL 60016

LOHAN ANDERSON, ARCH./INT.
401 N. MICHIGAN AVE., CHICAGO, IL 60611

CALOR DESIGN GROUP, LTD., MEP/FP
2217 N. WESTERN AVE., CHICAGO, IL 60647

C. S. ASSOCIATES, INC., STRUC.
4532 W. 103RD ST., OAK LAWN, IL 60453

MECHANICAL SCOPE OF WORK MASTER PLAN PHASES 1 AND 2

	ROOM NO.	MECHANICAL	PLUMBING & FIRE PROTECTION
FIRST FLOOR PHASE 1			
VESTIBULE (SNACK/VENDING) (FORMER PROJECTION ROOM)	106A	RE-INSTALL AND RE-BALANCE EXISTING CEILING DIFFUSER	
VESTIBULE (SNACK/VENDING) (FORMER PROJECTION ROOM)	106A		SPRINKLER HEAD RELOCATION
			PROVIDE HOT DRINK VENDING MACHINE WITH COLD WATER
FIRST FLOOR PHASE 2			
TECHNICAL WORKROOM (FORMER GEN. STORAGE & MOBILE GARAGE)	111	DISCONNECT & REMOVE SUPPLY DIFFUSERS AND RETURN GRILLES IN PROJECT AREA	
		NEW FAN-POWERED (FP) BOX WITH HOT WATER COIL, CONNECTED TO SUPPLY MAIN AND DISTRIBUTION DUCTWORK, PIPING, POWER & CONTROLS	
		SIX NEW CEILING DIFFUSERS AND TWO NEW RETURN DIFFUSERS	
TECHNICAL WORKROOM (FORMER GEN. STORAGE & MOBILE GARAGE)	111		DISCONNECT & REMOVE FROM GLYCOL-FILLED, ANTI-FREEZE SPRINKLER ZONE.
			INSTALL NEW SPRINKLER HEADS FROM WET SPRINKLER ZONE.
			ONE NEW STAFF SINK
MAINTENANCE WORKROOM, STORAGE, RECEIVING, OFFICES	113A, 114, 115, 116, 117	**REBALANCE VAV BOXES AND CEILING DIFFUSERS**	
WORKROOM (STORAGE AND SMALLER GARAGE)	118	DISCONNECT & REMOVE TWO HOT WATER UNIT HEATERS, PIPING, POWER & CONTROLS	
		RE-INSTALL ONE HOT WATER UNIT HEATER, PIPING, POWER & CONTROLS	
		RE-INSTALL POWER & CONTROLS FOR EXISTING EXHAUST FAN AND INSTALL NEW DUCTWORK FROM FAN TO WORKROOM WITH EXHAUST REGISTER AND FIRE DAMPER.	
WORKROOM (STORAGE AND SMALLER GARAGE)	118		SPRINKLER HEAD RECONNECTION TO GLYCOL-FILLED, ANTI-FREEZE SPRINKLER ZONE.
CIRC SERVICES MANAGER'S OFFICE, TECHL SERVICES MANAGER'S OFFICE & CONFERENCE ROOM	108J, 108N, 108O	DISCONNECT & REMOVE SUPPLY DIFFUSER AND RETURN GRILLE IN PROJECT AREA	
		NEW COOLING-ONLY VAV BOX CONNECTED TO SUPPLY MAIN AND THREE NEW CEILING DIFFUSERS AND THREE NEW RETURN GRILLES	
		THREE NEW CEILING DIFFUSERS AND THREE NEW RETURN DIFFUSERS	
		REBALANCE VAV BOX AND CEILING DIFFUSERS	
CIRC SERVICES MANAGER'S OFFICE, TECHL SERVICES MANAGER'S OFFICE & CONFERENCE ROOM	108J, 108N, 108O		SPRINKLER HEAD RELOCATION
CIRCULATION WORKROOM	108	ADD 4 SQ. FT. RETURN OPENING ABOVE CEILING BETWEEN CIRC WORKRM AND SORTING ROOM	
		REBALANCE VAV BOX AND CEILING DIFFUSERS	
GENERAL BUILDING STORAGE	110	RE-BALANCE EXISTING SUPPLY REGISTERS AND DIFFUSERS ON VAV BOX ZONE.	
GENERAL BUILDING STORAGE	110		SPRINKLER HEAD RELOCATION

	ROOM NO.	MECHANICAL	PLUMBING & FIRE PROTECTION
SECOND FLOOR PHASE 1			
FAMILY TOILET	203E	RE-BALANCE EXISTING EXHAUST REGISTER	
			REMOVE LAVATORY SINK & FAUCET (TURN-OVER TO LIBRARY) W/ PIPING & CARRIERS
			TWO NEW LAVATORY SINKS & FAUCETS (FURNISHED BY LIBRARY)
			ONE NEW WATER CLOSET & FLUSH VALVE (FURNISHED BY LIBRARY)
SECOND FLOOR PHASE 2			

MECHANICAL SCOPE OF WORK MASTER PLAN PHASES 1 AND 2

	ROOM NO.	MECHANICAL	PLUMBING & FIRE PROTECTION
THIRD FLOOR PHASE 1			
THIRD FLOOR PHASE 2			
ROTARY HERITAGE READING ROOM (FORMER TEEN STUDY LOUNGE)	302E	N/A	N/A
STUDY ROOM (THE COMMONS) (FORMER ROTARY HERITAGE READING ROOM)	303	DISCONNECT & REMOVE SUPPLY DIFFUSERS AND RETURN GRILLES IN PROJECT AREA	
		NEW COOLING-ONLY VAV BOX CONNECTED TO SUPPLY MAIN AND FIVE NEW CEILING DIFFUSERS AND TWO NEW RETURN GRILLES	
		FIVE NEW CEILING DIFFUSERS AND TWO NEW RETURN DIFFUSERS	
		REBALANCE VAV BOXES AND CEILING DIFFUSERS	
		NEW EXHAUST FAN, INLET AND DISCHARGE DUCTWORK, CONTROLS FOR FUTURE LOCAL VENTILATION SYSTEM;	
		ON ROOF, NEW EXHAUST GOOSENECK WITH CURB ADAPTER REPLACING EXISTING EXHAUST FAN	
STUDY ROOM (TEEN LOUNGE) (FORMER ROTARY HERITAGE READING ROOM)	303		SPRINKLER HEAD RELOCATION
			ONE NEW STAFF SINK
STAFF OFFICE (ADULT SERVICES WORKROOM)	306	INSTALL AND REBALANCE NEW PRIVATE OFFICE CEILING DIFFUSER & RETURN DIFFUSER	
		DISCONNECT AND REMOVE EXHAUST HOOD AND CONTROLS FOR RE-INSTALLATION	
STAFF OFFICE (ADULT SERVICES WORKROOM)	306		SPRINKLER HEAD RELOCATION
			ONE NEW STAFF SINK
STAFF OFFICE (CREATIVE SERVICES)	304	INSTALL RE-LOCATED EXHAUST HOOD AND CONTROLS WITH NEW DUCTWORK.	
		RELOCATE RETURN DIFFUSER	
		REBALANCE EXISTING CEILING DIFFUSERS	
STAFF OFFICE (CREATIVE SERVICES)	304		ONE NEW STAFF SINK

	ROOM NO.	MECHANICAL	PLUMBING & FIRE PROTECTION
FOURTH FLOOR PHASE 1			
ADULT FORUM, COMPUTER AREA	401Z	NEW COOLING-ONLY VAV BOX CONNECTED TO SUPPLY MAIN AND DISTRIBUTION DUCTWORK	
		FOUR RELOCATED CEILING DIFFUSERS WITH NEW BRANCH DUCTWORK AND ONE NEW RETURN DIFFUSER	
		DISCONNECT AND REMOVE FIVE CEILING DIFFUSERS FROM EXISTING VAV BOX AND RELOCATE ONE CEILING DIFFUSER	
ADULT FORUM, COMPUTER AREA	401Z		SPRINKLER HEAD RELOCATION
FOURTH FLOOR PHASE 2			
WORKROOM (REFERENCE STORAGE/READER'S SERVICES)	406	REBALANCE VAV BOX AND CEILING DIFFUSERS	
IT WORKROOM (FORMER COMPUTER LAB)	403	REBALANCE FP BOX AND CEILING DIFFUSERS	N/A

PLUMBING FIXTURE SCHEDULE

MANUFACTURERS:	FINAL APPROVAL BY ARCHITECT REQUIRED PRIOR TO PURCHASE / INSTALLATION
NON-FREEZE SILL COCKS:	WOODFORD, JR SMITH
GREASE TRAPS:	ROCKFORD, GORDON, JR SMITH
SHOWER AND MOP BASINS:	CREATIVE INDUSTRIES, MUSTEE, FIAT
FLOOR DRAINS, ROOF DRAINS, CARRIERS:	JR SMITH, JOSAM, WADE, ZURN

PRIOR TO ANY WORK, THE CONTRACTOR MUST VERIFY AND DOCUMENT THE CONDITION OF THE FIXTURES, FAUCETS AND FLUSH VALVES BEING RELOCATED OR PROVIDED BY THE LIBRARY.

TOTAL NUMBER OF FIXTURES	FIXTURE TAG	MODEL NUMBER	NEW FAUCET AND FITTINGS	ADA REQUIRED	MATERIALS	DIMENSIONS	MOUNTING	DESCRIPTION
1	LAV-2, ADA ACCESSIBLE, (EXISTING SINK OR EQUAL REMOUNTED)	AMERICAN STANDARD LUCERNE SERIES (BY OWNER)	SLOAN MODEL EAR-275-ISM ETF-312 A, EAF-12, INTEGRAL SPOUT MIXER, TRIM PLATE TO MATCH SINK HOLES. 0.5 GPM HEAD	34" HIGH, 27" CLEAR, 18" DEEP	NA	NA	WALL MOUNTED WITH CONCEALED CHAIR CARRIER	0.5 GPM FAUCET AERATOR, ADA CLEARANCES, INSULATED STOP AND TRAP COVERS, CAST GRID DRAIN WITH 1 ½" TAILPIECE, 1 ½ X 1 ½ SEMI CAST, 17 GAUGE, "P" TRAP WITH CLEAN OUT. BATTERY OPERATED.
1	LAV-3, CHILD'S, ADA ACCESSIBLE, (OWNER FURNISHED SINK OR EQUAL NEW SINK)	AMERICAN STANDARD LUCERNE SERIES (BY OWNER)	SLOAN MODEL EAR-275-ISM ETF-312 A, EAF-12, INTEGRAL SPOUT MIXER, TRIM PLATE TO MATCH SINK HOLES, 0.5 GPM HEAD	28" HIGH (**VERIFY WITH ARCHITECT**), 27" CLEAR, 18" DEEP	NA	NA	WALL MOUNTED WITH CONCEALED CHAIR CARRIER	0.5 GPM FAUCET AERATOR, ADA CLEARANCES, INSULATED STOP AND TRAP COVERS, CAST GRID DRAIN WITH 1 ½" TAILPIECE, 1 ½ X 1 ½ SEMI CAST, 17 GAUGE, "P" TRAP WITH CLEAN OUT. BATTERY OPERATED.
1	WC-3, 10 INCH HIGH JUVENILE TOILET	EXISTING AMER STD "BABY DEVORO" OR EQUAL TOILET FURNISHED BY OWNER	SLOAN OPTIMA MODEL 111 (OR 110) SMO	10 INCH HIGH BOWL RIM, PRE-SCHOOL ADA CLEARANCE TO SIDE, FRONT & W/ GRAB BAR	VITREOUS CHINA	10" ROUGH IN, 11" HIGH X 25.6" DEEP X 14" WIDE	FLOOR MOUNTED, 4 INCH CLOSET FLANGE,	MAX 1.6 GALLONS PER FLUSH (**VERIFY FIXTURE GPF**) , MINIMUM 25 PSI WATER SUPPLY, WITH ENLONGATED, EXTRA HEAVY DUTY OPEN FRONT SEAT W/ COVER,
1	WOB-1	WATER OUTLET BOX GUY GRAY MODEL	NOT APPLICABLE	NOT APPLICABLE				FLUSH-MOUNTED WALL BOX WITH (1) 3/4" HOSE BIBB (COLD) CONNECTION WITH 1/2" SWEATED BRASS CONNECTION. WITH WHITE FINISHED STEEL BOX & BEVERAGE BACKFLOW PREVENTER
2	SK-1	ELKAY MODEL ELUHAD211555PD	CHICAGO 201 AHA8CP E12 390	34" HIGH, 27" CLEAR, 18" DEEP	18 GAUGE, TYPE 304 STAINLESS STEEL	Bowl 21" X 15.75" X 5.375"	SEALED, COUNTER, CAULK	DRAIN BASKET AND GRID, COUNTER MOUNTED FAUCET, CHICAGO STOPS, SOUND GUARD UNDER COATING, ADA CLEARANCES, INSULATED STOP AND TRAP COVERS, WITH 1-1/2" TAILPIECE, 1-1/2 X 1-1/2 SEMI CAST, 17 GAUGE, "P" TRAP WITH CLEAN OUT.
1	SK-2	ELKAY MODEL ELUHAD131655PD	CHICAGO 201 AHA8CP E12 390	34" HIGH, 27" CLEAR, 18" DEEP	18 GAUGE, TYPE 304 STAINLESS STEEL	Bowl 13.5" X 16" X 5.375"	SEALED, COUNTER, CAULK	DRAIN BASKET AND GRID, COUNTER MOUNTED FAUCET, CHICAGO STOPS, SOUND GUARD UNDER COATING, ADA CLEARANCES, INSULATED STOP AND TRAP COVERS, WITH 1-1/2" TAILPIECE, 1-1/2 X 1-1/2 SEMI CAST, 17 GAUGE, "P" TRAP WITH CLEAN OUT.

GENERAL PLUMBING FIXTURE NOTES	
1	ALL PUBLIC PLUMBING FIXTURE INSTALLATIONS SHALL BE VANDALPROOF AND ADA ACCESSIBLE.
2	FIXTURE AND EQUIPMENT LOCATIONS, COLORS, AND MOUNTING SHALL BE APPROVED BY THE ARCHITECT AND OWNER.
3	PROVIDE CHICAGO OR MCGUIRE BRASS/CHROME, HEAVY-DUTY ANGLE STOPS ON ALL FIXTURES, VANDALPROOF HANDLE AS NECESSARY. **1/4 TURN, LOOSE-KEY IN PUBLIC AREAS IS ACCEPTABLE.**
4	ALL SINKS AND OTHER FIXTURES SHALL HAVE 17 GAUGE CAST BRASS/CHROME TUBING AND TRAPS WITH CLEAN OUTS
5	ALL HANDICAP ACCESSIBLE FIXTURES SHALL HAVE TRAPS AND SUPPLY PIPING WITH INSULATION, TIGHT TO WALL
6	HANDICAP, ACCESSIBLE PLUMBING FIXTURE MATERIALS AND INSTALLATIONS SHALL MEET STATE OF ILLINOIS, ADA AND ANSI REQUIREMENTS. INSULATE TRAP, SUPPLIES AND MIXING VALVES WITH MCGUIRE, PRO-WRAP, OR TRUEBRO PREFABRICATED PIPE WRAP.
7	ACCESSIBLE MOUNTING HEIGHTS AND CLEARANCES AS DIRECTED BY THE ARCHITECT.
8	PROVIDE VANDALPROOF ANSI 1016/1017 115F MAXIMUM MIXING VALVE FOR EACH FAUCET.
9	ACCESSIBLE MOUNTING HEIGHTS AND CLEARANCES SHALL INCLUDE THE FOLLOWING ACCESSIBILITY DIMENSIONS SO AS TO ASSURE COMPLIANCE WITH 400.310(N) OF THE ILLINOIS ACCESSIBILTY CODE (IAC): A. MAXIMUM LAVATORY COUNTERTOP HEIGHT (34"); B. MINIMUM LAVATORY KNEE SPACE (29"); C. ACCESSIBLE URINAL LIP HEIGHT (17"); D. ACCESSIBLE URINAL MAXIMUM CONTROL HEIGHT (44"). VERIFY PRE-SCHOOL AND JUVENILE ADA DIMENSIONS WITH AHJ.
PLUMBING MATERIALS AND ACCESSORIES:	
1	SUSPENDED WASTE AND VENT PIPING, PIPE 2-1/2" AND LARGER SERVICE WEIGHT HUB AND SPIGOT CAST IRON PIPE. 2" AND SMALLER TYPE K COPPER.
2	INTERIOR HOT AND COLD WATER DISTRIBUTION PIPING, 3" AND SMALLER - TYPE L HARD DRAWN COPPER TUBING.
3	ALL UNDERGROUND SANITARY SEWER LINES SHALL BE STANDARD SERVICE WEIGHT OF SIZES INDICATED ON THE DRAWING. MINIMUM SIZE IS 4 INCH DIAMETER.
4	IN ALL CASES WHERE COPPER PIPE CONNECTIONS ARE MADE TO DISSIMILAR METAL, PROVIDE DIELECTRIC FITTINGS.
5	BALL VALVES FOR SHUT-OFF SHALL BE AS MANUFACTURED BY MILWAUKEE OR NIBCO.
6	FLOOR DRAINS RECEIVING WASTE FROM A/C UNITS SHALL BE WITH "E" TYPE FUNNEL.
7	FLOOR DRAINS FOR GENERAL AREA OR TOILET ROOMS, ROUND POLISHED BRONZE TOP.
8	F.C.O. FLOOR CLEANOUTS ROUND OR SQUARE NICKEL BRONZE, TUF-TOP (TO SUIT FINISHED FLOOR CONDITIONS).
9	PROVIDE PROPER AIR CHAMBERS AS PER CITY AND STATE PLUMBING CODE. 12 INCH AT EACH FIXTURE SUPPLY AND 24 INCH HIGH AT TOP OF RISERS.

PIPE MATERIAL SCHEDULE

PIPE USE	MATERIAL	TYPE	STANDARDS	REMARKS	INSULATION MEET LATEST INTL ENERGY CONS	
					MATERIAL, THICKNESS, R-VALUE	INSULATION LOCATION
SANITARY, VENT & STORM ABOVE GROUND	CAST-IRON	HUB & SPIGOT	ASTM-A-74; ASTM A-888; CISPI 301;	LEAD AND OAKUM JOINTS ONLY		
	COPPER OR COPPER-ALLOY	K,L,M	ASTM-B-75; ASTM B-88; ASTM-B-251; ASTM-B-306			
	POLYVINYL CHLORIDE (PVC)	SCHEDULE 40	ASTM-D-2665, ASTM-D-2449; ASTM-F-891;CSA CAN/CSA B181.2	ALTERNATE PIPE, PER AUTHORITY HAVING JURISDICTION		
DOMESTIC WATER PIPING, ABOVE GROUND	COPPER OR COPPER-ALLOY (PIPE OR TUBING)	L	ASTM-B-42,ASTM-B-74; ASTM-B-88;ASTM-B-251; ASTM-B-302;ASTM-B-447	CONFORM TO NSF 61	**MIN 3/4" THICK ; MIN.R=3.8, FIBERGLASS OR FLEXIBLE ELASTOMERIC WITH VAPOR BARRIER**	**ALL HOT, COLD, & HOT RETURN PIPE AND FITTINGS**

PLUMBING NOTES

1. THE PLUMBING WORK FOR THIS PROJECT SHALL MEET THE REQUIREMENTS OF THE VILLAGE OF DES PLAINES PLUMBING CODE.
2. THE PLUMBING CONTRACTOR SHALL GUARANTEE ALL MATERIALS, DEVICES, EQUIPMENT, WORKMANSHIP AND THE SUCCESSFUL OPERATION OF ALL SYSTEMS & APPARATUS INSTALLED FOR A PERIOD OF ONE YEAR FROM THE DATE OF FINAL ACCEPTANCE. ALL MATERIALS, DEVICES & EQUIPMENT TO BE INSTALLED SHALL HAVE CODE AUTHORITY APPROVAL FOR SUCH INSTALLATION AND HAVE PROPER UL LABELING.
3. THE PLUMBING CONTRACTOR SHALL FURNISH ALL MATERIALS, EQUIPMENT, AND LABOR NECESSARY FOR MODIFICATIONS TO THE PLUMBING SYSTEM IN ACCORDANCE WITH ALL GOVERNING CODES, DRAWINGS, APPROVED SUBMITTALS, OWNER'S REQUIREMENTS AND A.S SPECIFIED.
4. THE PLUMBING CONTRACTOR SHALL PROVIDE ALL WARRANTIES AND OPERATING INSTRUCTIONS TO THE OWNER.
5. THE PLUMBING CONTRACTOR SHALL TAKE SUCH PROTECTIVE MEASURES AND PRECAUTIONS AS MAY BE REQUIRED OR NECESSARY TO PREVENT INJURIES OR ACCIDENTS IN ACCORDANCE WITH CONDITIONS & OSHA REQUIREMENTS.
6. THE PLUMBING CONTRACTOR SHALL SUPPLY ALL HANGERS AND SUPPORTS FOR HIS WORK. ALL PIPING TO BE SUSPENDED FROM STRUCTURAL MEMBERS.
7. THE DRAWINGS DO NOT DETAIL ALL FINAL CONNECTIONS TO EQUIPMENT. PLUMBING CONTRACTOR TO VERIFY CONNECTIONS PER MANUFACTURERS' SHOP DRAWINGS & OTHER REQUIREMENTS.
8. LAYOUT IS DIAGRAMMATIC AND PLUMBING CONTRACTOR SHALL INSTALL EQUIPMENT AND PIPING TO MEET FIELD CONDITIONS. IT SHALL BE THE RESPONSIBILITY OF THE PLUMBING CONTRACTOR TO VERIFY & CHECK ALL DETAILS & APPLICABLE NOTES FOR PLUMBING WORK AGAINST THE ARCHITECTURAL, ELECTRICAL & MECHANICAL WORK & ALLOW FOR ANY INTERFERENCES, ETC. COORDINATE ALL WORK WITH THE OTHER TRADES. MAINTAIN CLEARANCES & HEADROOM AT THE EQUIPMENT & DEVICES FOR INSPECTION & SERVICE.
9. FURNISH AND INSTALL A COMPLETE AND OPERABLE SYSTEM OF DOMESTIC HOT & COLD WATER TO EACH & EVERY NEW PLUMBING FIXTURE, APPLIANCE & OUTLET WITH FINAL CONNECTIONS THERETO. RECONNECT FIXTURES WHICH WERE TEMPORARILY DISCONNECTED FOR NEW TILE WORK, ETC. PIPE FITTINGS, VALVES, AIR CHAMBERS, INSULATION, DIELECTRIC UNIONS, HANGERS & SUPPORTED MEMBERS SHALL BE PROVIDED. CONNECT TO A COMPLETE & OPERABLE SANITARY, WASTE, VENT SYSTEMS INCLUDING CONNECTIONS FOR NEW PLUMBING FIXTURES, APPLIANCES, DRAINS & OUTLETS WITH FINAL CONNECTIONS THERETO & CONNECTIONS TO THE SOIL, WASTE, VENT AND STACKS.
10. ALL POWER WIRING SHALL BE PROVIDED BY THE ELECTRICAL CONTRACTOR. THE PLUMBING CONTRACTOR SHALL PROVIDE ALL NECESSARY INFORMATION AND DEVICES (INCLUDING MOTOR STARTERS) FOR THE ELECTRICAL INSTALLATIONS.
11. ALL PLUMBING PIPES AND FIXTURES SHALL BE PROTECTED FROM FREEZING; PROVIDE INSULATION IN WALLS, FLOORS, ETC., AS MAY BE INDICATED OR REQUIRED.
12. EVERY NEW HORIZONTAL SOIL AND WASTE PIPE SHALL BE PROVIDED WITH A READILY ACCESSIBLE CLEAN OUT WHERE NECESSARY AND ALSO AS REQUIRED BY LOCAL CODE.
13. CONNECT TO SANITARY VENTS THROUGH THE ROOF. NEW WASTE VENTS, IF NEEDED, TO BE MINIMUM OF 2" DIAMETER WITH 2"X4" INCREASER AT ROOF, ALL 4" DIAMETER STACK VENTS TO HAVE 4"X5" INCREASER AT ROOF, INSTALLED VENTS A MINIMUM OF 30" FROM ANY PARAPET WALL. PROVIDE VENTS AS REQUIRED BY LOCAL CODE.
14. ALL UNDERGROUND SANITARY SEWER LINES SHALL BE OF SIZES INDICATED ON THE DRAWINGS WITH A MINIMUM SIZE OF 4 INCH DIAMETER. PIPE MATERIAL AND JOINING METHODS MUST BE APPROVED BY LOCAL AUTHORITY.
15. MINIMUM SEWER LINE PITCH SHALL BE SET A 1/8" PER FOOT, WITH EACH INVERT TO START AT A MINIMUM OF 1'-0" BELOW THE FLOOR, UNLESS SPECIFICALLY INDICATED OR APPROVED TO THE CONTRARY BY THE ARCHITECT OR OWNER'S REPRESENTATIVE. ANY LINES INSTALLED IMPROPERLY SHALL BE REMOVED AND REPLACED AT THE CONTRACTOR'S COST.
16. ALL PIPING TO BE SUSPENDED FROM STRUCTURAL MEMBERS OF BUILDING, AS APPROVED BY ARCHITECT AND OWNER'S REPRESENTATIVE.
17. ALL WATER PIPING SHALL BE OVERHEAD AND SHALL BE COPPER. SOLDERED SWEAT FITTINGS ARE REQUIRED EXCEPT WHERE COMPRESSION FITTINGS ARE NECESSARY. PROVIDE DIELECTRIC ISOLATION BETWEEN ALL DISSIMILAR MATERIALS. INSTALL BACKFLOW PROTECTION DEVICES AS REQUIRED BY LOCAL CODES. ABOVE GRADE WATER PIPING SHALL BE TYPE L COPPER. PIPE MATERIAL AND JOINING METHODS MUST BE APPROVED BY LOCAL AUTHORITY.
    ALL BELOW GRADE WATER PIPING MATERIAL AND JOINING METHODS MUST BE APPROVED BY LOCAL AUTHORITY.
18. ALL NEW OR EXPOSED SUSPENDED DOMESTIC WATER PIPING (INCLUDING ALL HORIZONTAL PIPING CONCEALED IN WALLS AND FLOORS, FITTINGS, VALVES, ETC.) SHALL BE INSULATED. NOTE THAT INSULATION IS REQUIRED FOR ALL WATER PIPING IN THE AND IN AREAS WHERE FREEZING IS POSSIBLE.
19. ALL PIPING SHALL RUN CONCEALED IN WALLS, JOIST SPACES AND/OR IN CEILING SPACES. WHEN PIPING IS REQUIRED TO BE EXPOSED, IT MUST RUN PARALLEL TO STRUCTURAL MEMBER OR EXACTLY PERPENDICULAR TO STRUCTURE. RUN AS OBSCURE AS POSSIBLE AS DIRECTED BY ARCHITECT.
20. PROVIDE SHUT-OFF VALVES BELOW ALL FIXTURES (CHROME TYPE IN FINISHED SPACES), AT ALL BRANCH LINES, AT THE BASE OF EACH HOT AND COLD WATER RISER OR DROP, AND ON EXPOSED WATER LINE OUTLETS; ALL SHUT -OFF VALVES SHALL BE IN ACCESSIBLE LOCATIONS AND POSITIONS. PROVIDE THERMOSTATIC MIXING VALVES ON ALL HAND SINKS AND SHOWERS PER ADA AND CODE STANDARDS.

N

REV.	DATE	ISSUE
	8-14-15	ISSUE FOR BID AND PERMIT

DATE SIGNED:

Des Plaines Public Library
Phased Improvements

PROJECT NUMBER: 13300

PLUMBING SCHEDULES

P2.1

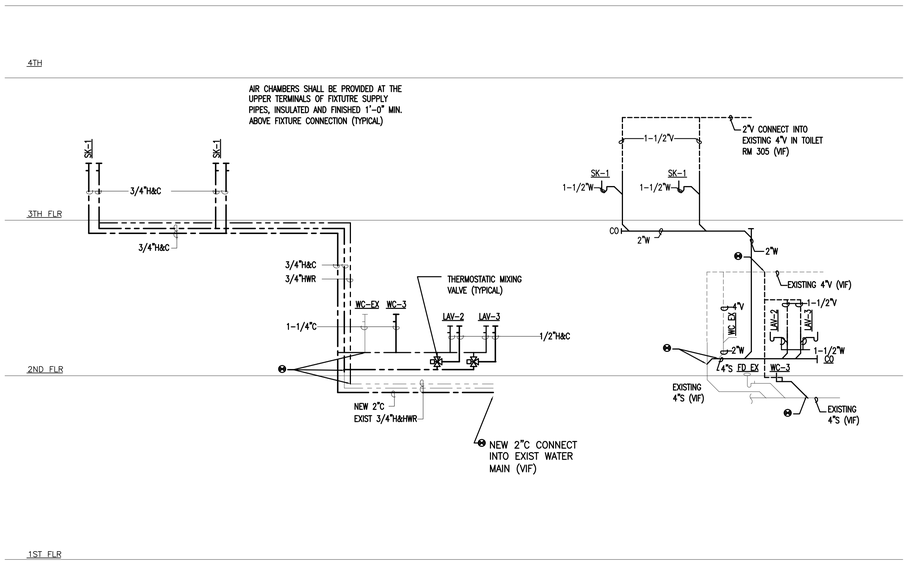

1 WATER RISER DIAGRAM
SCALE: N.T.S.

2 SANITARY /WASTE WATER DIAGRAM
SCALE: N.T.S.

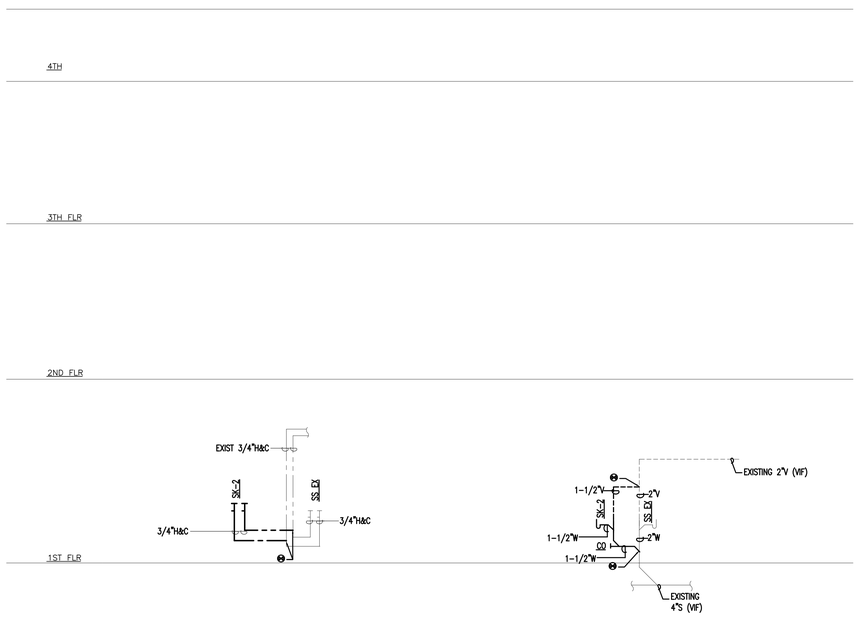

3 WATER RISER DIAGRAM
SCALE: N.T.S.

4 SANITARY /WASTE WATER DIAGRAM
SCALE: N.T.S.

PLUMBING SYMBOL LIST

NOTE THAT ALL SYMBOLS MAY NOT BE USED FOR THIS PROJECT.

©1993 CALOR DESIGN GROUP LTD.

PIPE FITTINGS

- GATE VALVE ON VERTICAL PIPE
- STRAINER
- DIRECTION OF FLOW
- GATE VALVE
- CHECK VALVE
- BALANCING COCK OR, NATURAL GAS COCK
- PITCH DOWN IN DIRECTION OF FLOW
- RISER (ELBOW) DOWN
- CAPPED PIPE END
- RISER (TEE) DOWN
- RISER (ELBOW) UP
- RISER (TEE) UP
- UNION (FLANGED)
- UNION
- VENT PIPING
- SD — STORM DRAIN, SUSPENDED, DOWNSPOUT (DS)
- SANITARY (SOIL) OR WASTE SEWER (S,W)
- FOOTING OR SUB-SOIL DRAIN TILE
- DOMESTIC COLD WATER (CW OR C)
- DOMESTIC HOT WATER SUPPLY (HW OR H) (WITH TEMPERATURE IF NOT 140F)
- CO — CLEAN OUT (CO) PLUG
- YCO — YARD CLEAN OUT
- FCO — FLOOR CLEAN OUT
- WALL CLEAN OUT (WCO)
- G — NATURAL GAS-LOW PRESSURE
- PIPE GUIDE OR SLEEVE
- MAN HOLE (MH)
- CATCH BASIN (CB)
- STORM CATCH BASIN (SCB)
- FLOOR DRAIN
- OPEN SITE DRAIN

ABBREVIATIONS

AD	AREA DRAIN
AFF	ABOVE FINISHED FLOOR
BFP	BACKFLOW PREVENTER
CI	CAST IRON
CW	CLOTHES WASHING MACHINE
DN	DOWN
DV	DRAIN VALVE
DS	DOWN SPOUT
DW	DISH WASHING MACHINE
DWP	DOMESTIC WATER PUMP
EX	EXISTING
FBO	FURNISHED BY OTHERS
FD	FLOOR DRAIN
FS	FLOOR SINK
GC	GENERAL CONTRACTOR
GPM	GALLONS PER MINUTE
GT	GREASE TRAP
HB	HOSE BIBB
HD	HUB OR FUNNEL DRAIN
INV ELEV	INVERT ELEVATION
KS	KITCHEN STACK
KW	KITCHEN WASTE
LAV	LAVATORY
LB	LAUNDRY BOX
LT	LAUNDRY TRAY/SINK
MB	MOP BASIN
NFSC	NON-FREEZE SILL COCK
NIC	NOT IN CONTRACT
OSD	OPEN SITE DRAIN
PS	PLUMBING STACK
RD	ROOF DRAIN
ROB	ROD OUT BASIN
SK	SINK
SS	SERVICE SINK OR, STAINLESS STEEL
SE	SEWAGE EJECTOR
SP	SUMP PUMP
TYP	TYPICAL
U.G.	UNDER GROUND
UR	URINAL
VIF	VERIFY IN FIELD
VTR	VENT THRU ROOF
WS	WASTE STACK
WC	WATER CLOSET (TOILET)
YCO	YARD CLEAN OUT

CLEAN OUT DETAIL

©1993 CALOR DESIGN GROUP LTD.

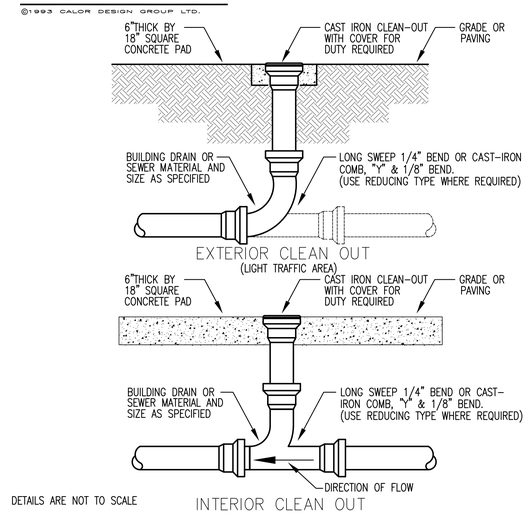

DETAILS ARE NOT TO SCALE

ARCHITECTURE PLANNING INTERIORS
LOHAN ANDERSON

DES PLAINES PUBLIC LIBRARY, OWNER
1501 ELLINWOOD ST., DES PLAINES, IL 60016

LOHAN ANDERSON, ARCH./INT.
401 N. MICHIGAN AVE., CHICAGO, IL 60611

CALOR DESIGN GROUP, LTD., MEP/FP
2217 N. WESTERN AVE., CHICAGO, IL 60647

C. S. ASSOCIATES, INC., STRUC.
4532 W. 103RD ST., OAK LAWN, IL 60453

N

REV.	DATE	ISSUE
	8-14-15	ISSUE FOR BID AND PERMIT

DATE SIGNED:

Des Plaines Public Library
Phased Improvements

PROJECT NUMBER: 13300

PLUMBING DETAILS AND SYMBOLS

P3.1

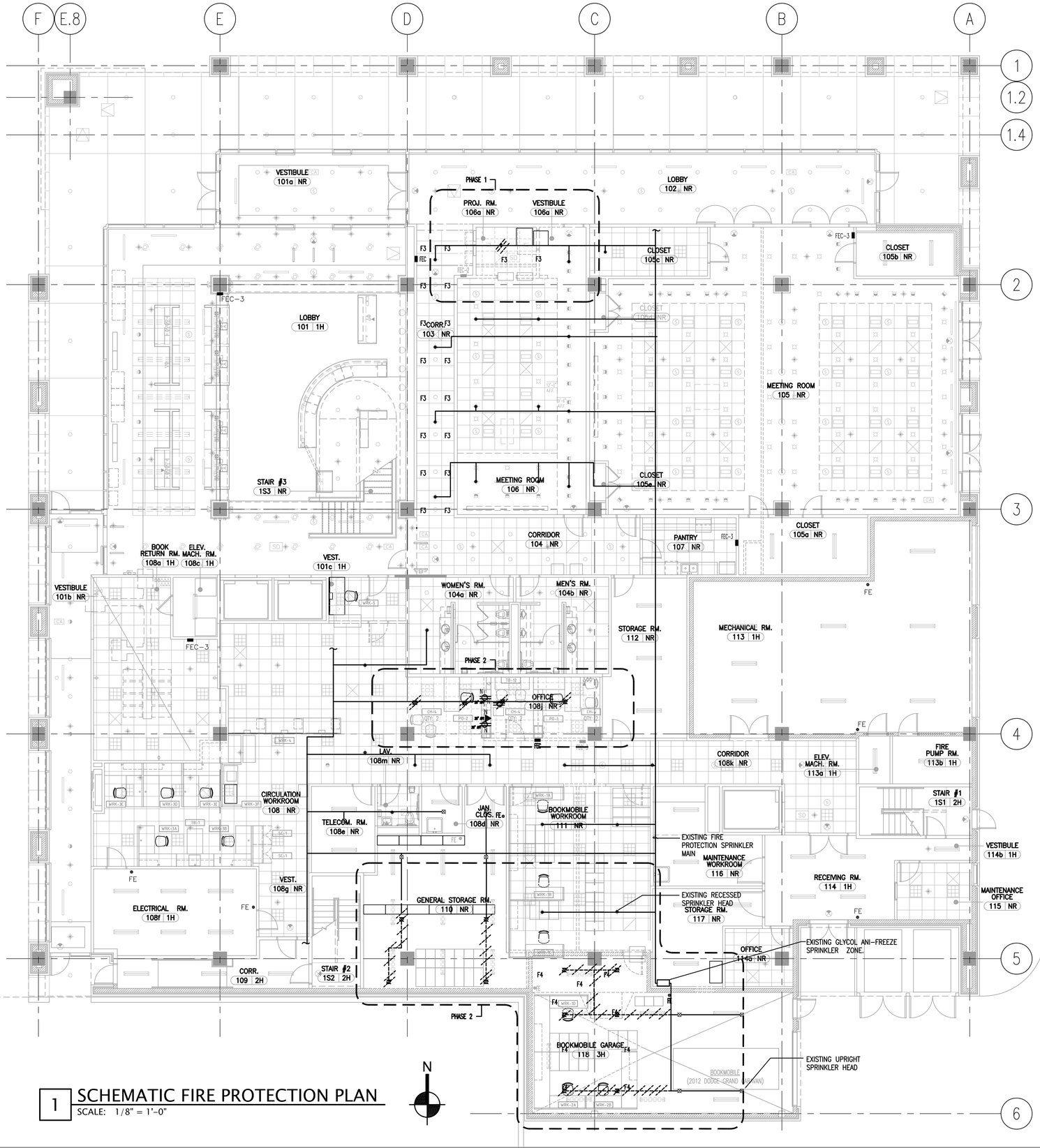

1 SCHEMATIC FIRE PROTECTION PLAN
SCALE: 1/8" = 1'-0"

ARCHITECTURE PLANNING INTERIORS
LOHAN ANDERSON

DES PLAINES PUBLIC LIBRARY, OWNER
1501 ELLINWOOD ST., DES PLAINES, IL 60016

LOHAN ANDERSON, ARCH./INT.
401 N. MICHIGAN AVE., CHICAGO, IL 60611

CALOR DESIGN GROUP, LTD., MEP/FP
2217 N. WESTERN AVE., CHICAGO, IL 60647

C. S. ASSOCIATES, INC., STRUC.
4532 W. 103RD ST., OAK LAWN, IL 60453

REV.	DATE	ISSUE
	8-14-15	ISSUE FOR BID AND PERMIT

DATE SIGNED:

Des Plaines Public Library
Phased Improvements

PROJECT NUMBER: 13300

1ST FLOOR
SCHEMATIC F.P.
PLAN - DEMO

FPD1.1

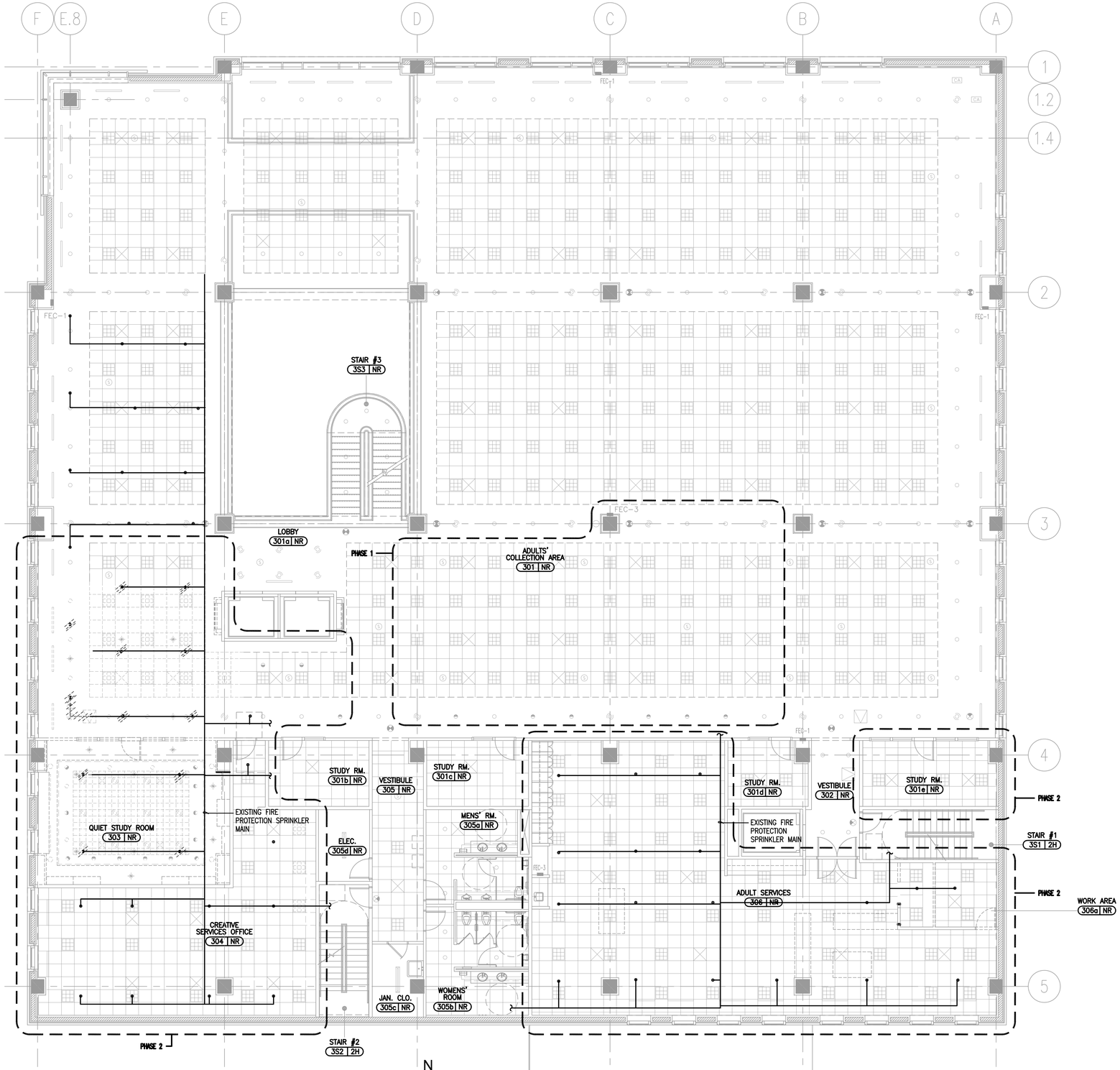

1 SCHEMATIC FIRE PROTECTION PLAN

SCALE: 1/8" = 1'-0"

ARCHITECTURE PLANNING INTERIORS

LOHAN ANDERSON

DES PLAINES PUBLIC LIBRARY, OWNER
1501 ELLINWOOD ST., DES PLAINES, IL 60016

LOHAN ANDERSON, ARCH./INT.
401 N. MICHIGAN AVE., CHICAGO, IL 60611

CALOR DESIGN GROUP, LTD., MEP/FP
2217 N. WESTERN AVE., CHICAGO, IL 60647

C. S. ASSOCIATES, INC., STRUC.
4532 W. 103RD ST., OAK LAWN, IL 60453

REV.	DATE	ISSUE
	8-14-15	ISSUE FOR BID AND PERMIT

DATE SIGNED:

Des Plaines Public Library
Phased Improvements

PROJECT NUMBER: 13300

3RD FLOOR
SCHEMATIC F.P.
PLAN - DEMO

FPD1.2

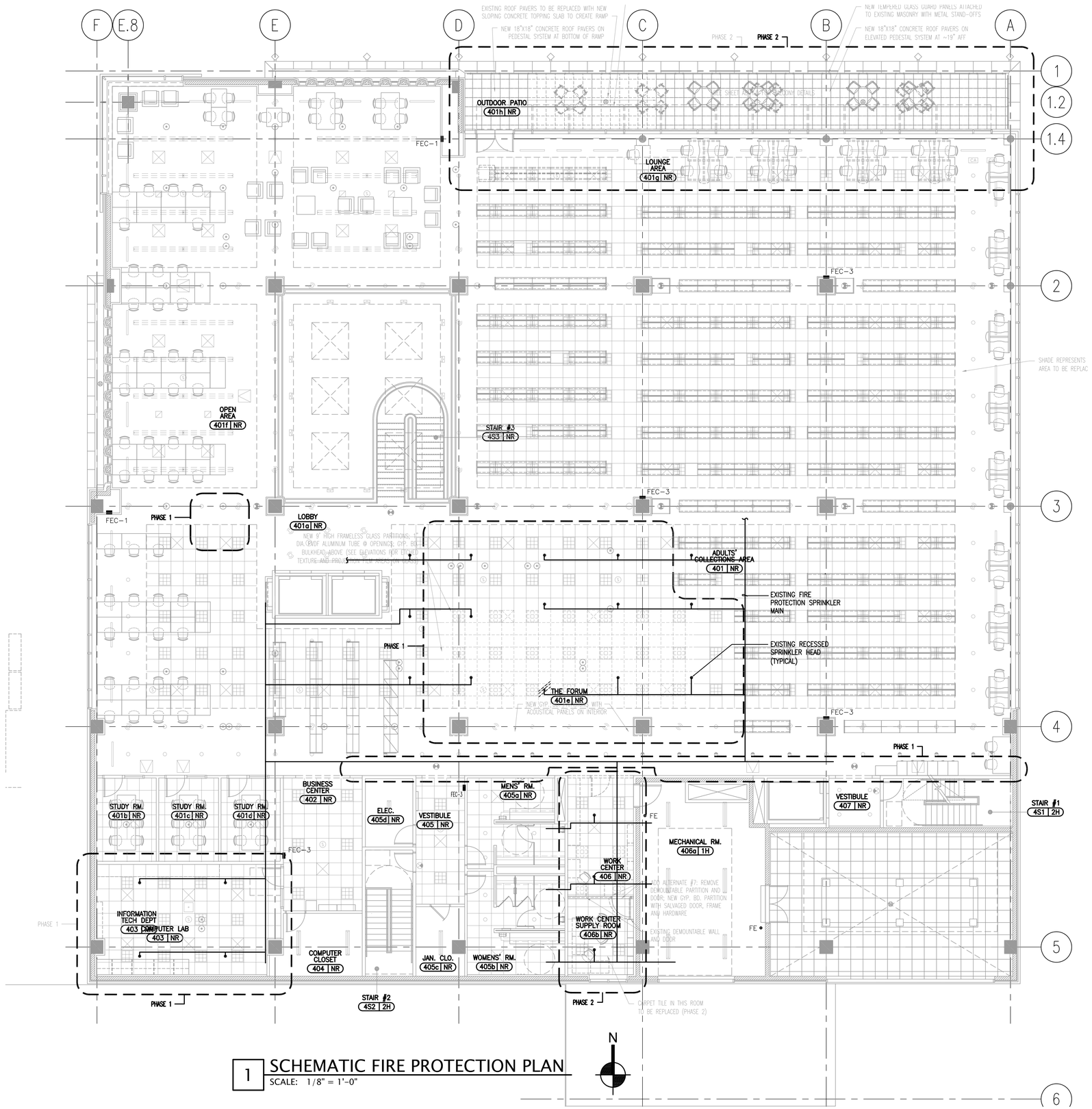

1 SCHEMATIC FIRE PROTECTION PLAN
SCALE: 1/8" = 1'-0"

ARCHITECTURE PLANNING INTERIORS

LOHAN ANDERSON

DES PLAINES PUBLIC LIBRARY, OWNER
1501 ELLINWOOD ST., DES PLAINES, IL 60016

LOHAN ANDERSON, ARCH./INT.
401 N. MICHIGAN AVE., CHICAGO, IL 60611

CALOR DESIGN GROUP, LTD., MEP/FP
2217 N. WESTERN AVE., CHICAGO, IL 60647

C. S. ASSOCIATES, INC., STRUC.
4532 W. 103RD ST., OAK LAWN, IL 60453

REV.	DATE	ISSUE
	8-14-15	ISSUE FOR BID AND PERMIT

DATE SIGNED:

Des Plaines Public Library
Phased Improvements

PROJECT NUMBER: 13300

4TH FLOOR
SCHEMATIC F.P.
PLAN - DEMO

FPD-1.3

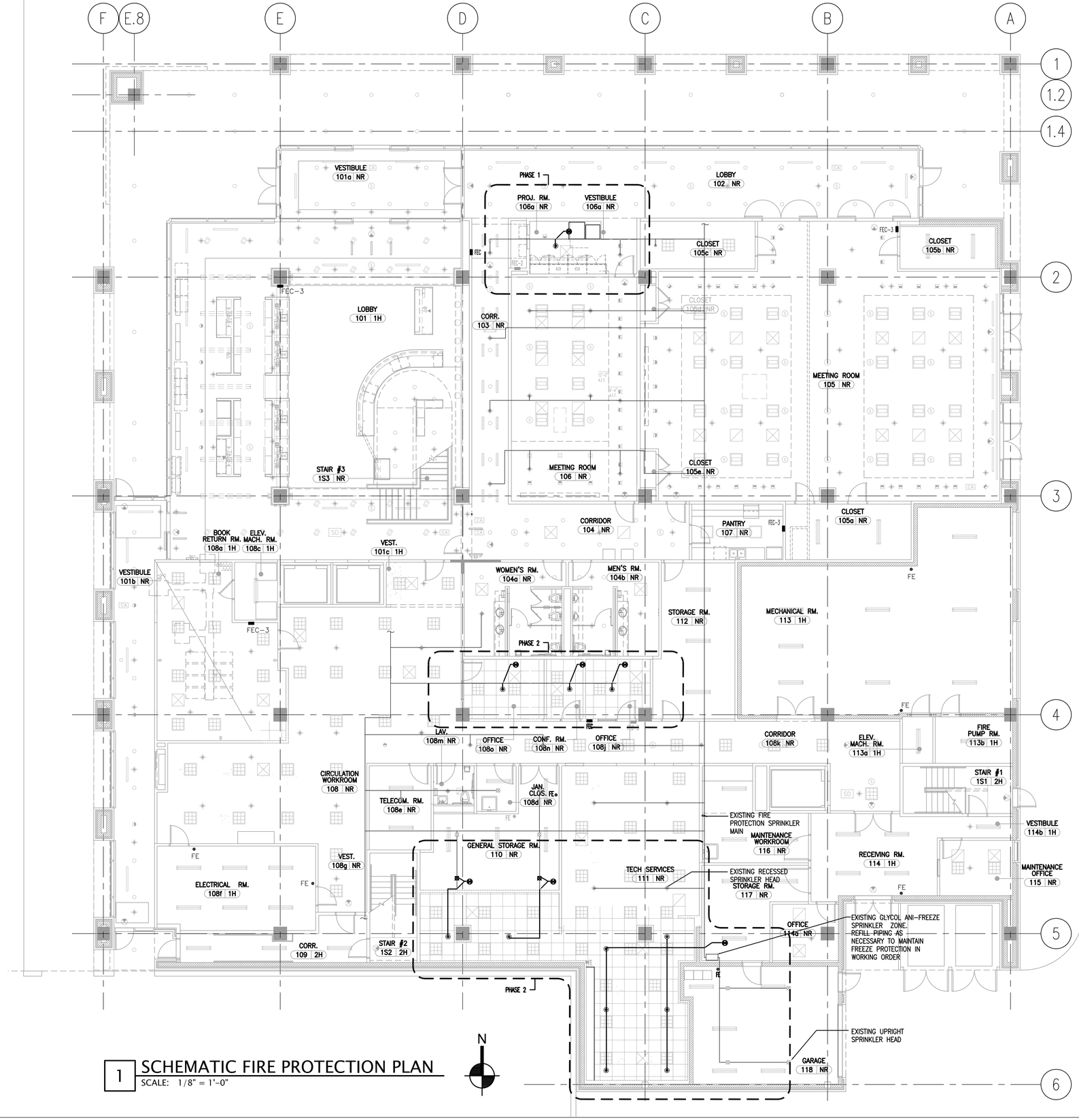

1 SCHEMATIC FIRE PROTECTION PLAN

SCALE: 1/8" = 1'-0"

ARCHITECTURE PLANNING INTERIORS

LOHAN ANDERSON

DES PLAINES PUBLIC LIBRARY, OWNER
1501 ELLINWOOD ST., DES PLAINES, IL 60016

LOHAN ANDERSON, ARCH./INT.
401 N. MICHIGAN AVE., CHICAGO, IL 60611

CALOR DESIGN GROUP, LTD., MEP/FP
2217 N. WESTERN AVE., CHICAGO, IL 60647

C. S. ASSOCIATES, INC., STRUC.
4532 W. 103RD ST., OAK LAWN, IL 60453

REV.	DATE	ISSUE
	8-14-15	ISSUE FOR BID AND PERMIT

DATE SIGNED:

Des Plaines Public Library
Phased Improvements

PROJECT NUMBER: 13300

1ST FLOOR
SCHEMATIC F.P.
PLAN - NEW

FP1.1

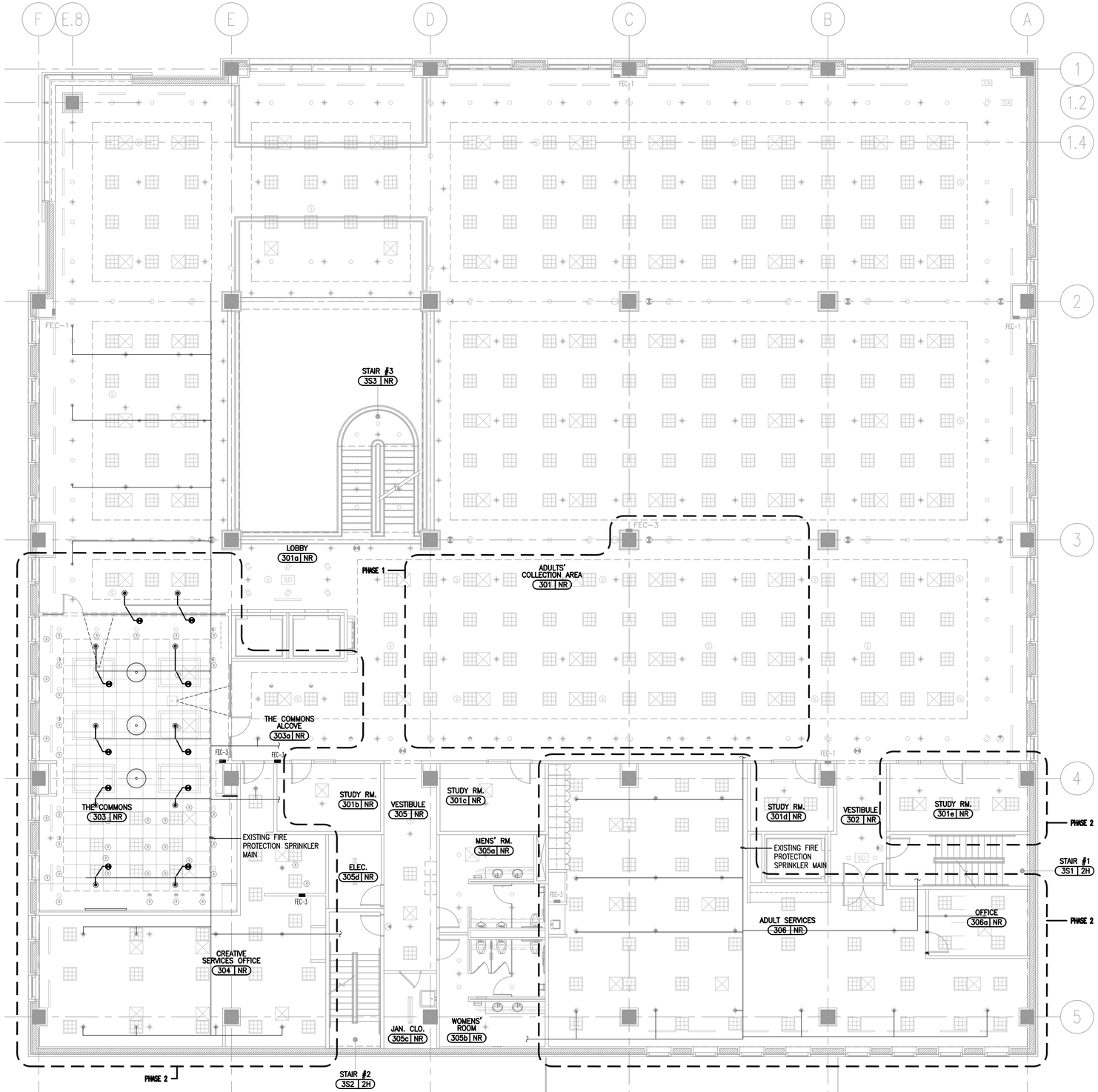

1 SCHEMATIC FIRE PROTECTION PLAN

SCALE: 1/8" = 1'-0"

ARCHITECTURE PLANNING INTERIORS

LOHAN ANDERSON

DES PLAINES PUBLIC LIBRARY, OWNER
1501 ELLINWOOD ST., DES PLAINES, IL 60016

LOHAN ANDERSON, ARCH./INT.
401 N. MICHIGAN AVE., CHICAGO, IL 60611

CALOR DESIGN GROUP, LTD., MEP/FP
2217 N. WESTERN AVE., CHICAGO, IL 60647

C. S. ASSOCIATES, INC., STRUC.
4532 W. 103RD ST., OAK LAWN, IL 60453

REV.	DATE	ISSUE
	8-14-15	ISSUE FOR BID AND PERMIT

DATE SIGNED:

Des Plaines Public Library
Phased Improvements

PROJECT NUMBER: 13300

3RD FLOOR
SCHEMATIC F.P.
PLAN –

FP1.2

ARCHITECTURE PLANNING INTERIORS
LOHAN ANDERSON

DES PLAINES PUBLIC LIBRARY, OWNER
1501 ELLINWOOD ST., DES PLAINES, IL 60016

LOHAN ANDERSON, ARCH./INT.
401 N. MICHIGAN AVE., CHICAGO, IL 60611

CALOR DESIGN GROUP, LTD., MEP/FP
2217 N. WESTERN AVE., CHICAGO, IL 60647

C. S. ASSOCIATES, INC., STRUC.
4532 W. 103RD ST., OAK LAWN, IL 60453

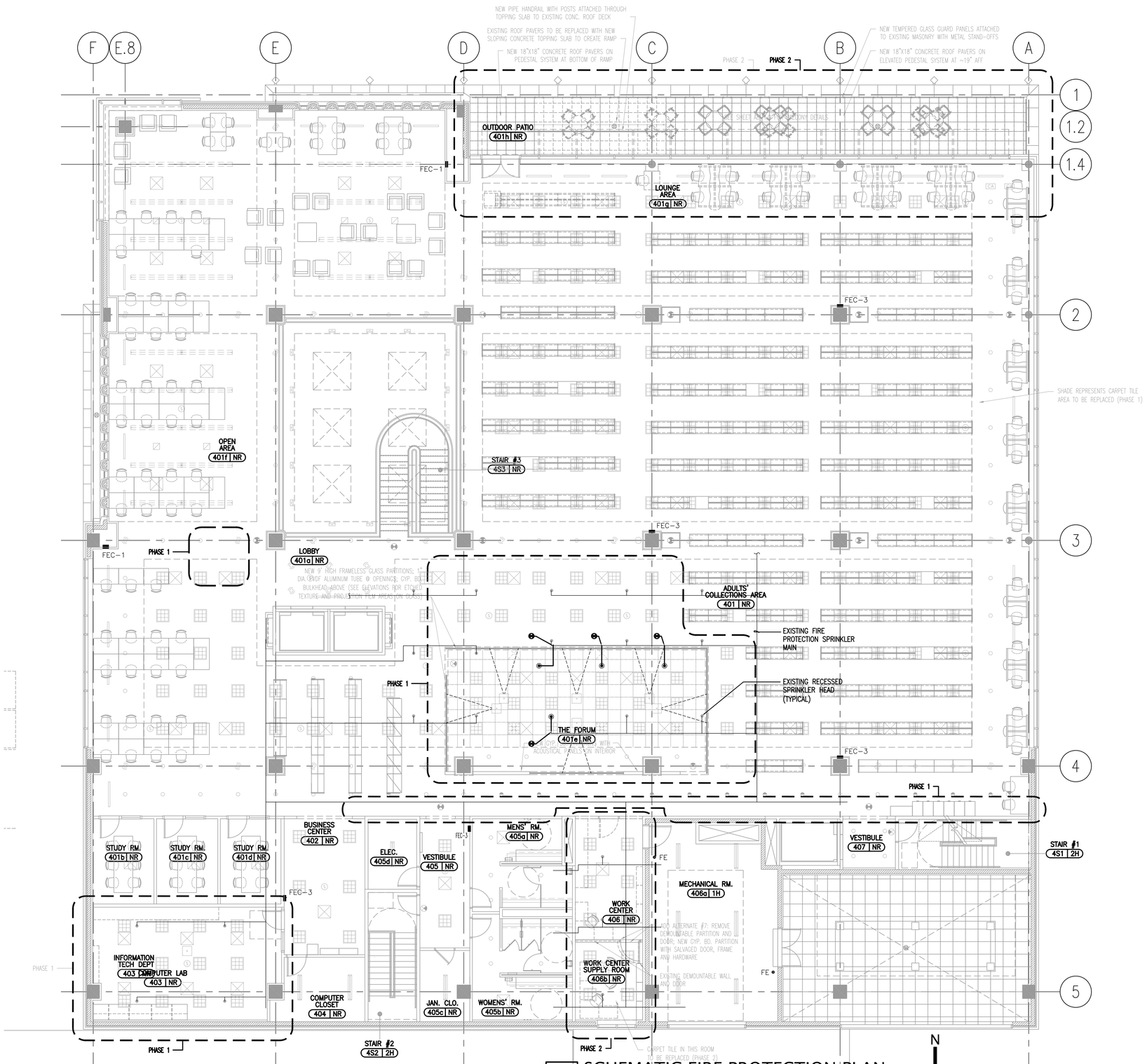

1 SCHEMATIC FIRE PROTECTION PLAN
SCALE: 1/8" = 1'-0"

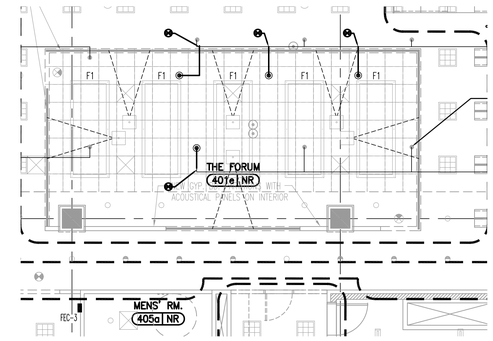

2 PLAN DETAIL ADD-ALT. #6
SCALE: 1/8" = 1'-0"

N

REV.	DATE	ISSUE
	8-14-15	ISSUE FOR BID AND PERMIT

DATE SIGNED:

Des Plaines Public Library
Phased Improvements

PROJECT NUMBER: 13300

4TH FLOOR
SCHEMATIC F.P.
PLAN -

FP1.3

FIRE PROTECTION NOTES:

©1993 CALOR DESIGN GROUP LTD.

1. – THE MINIMUM NUMBER OF SPRINKLER HEADS FOR BIDDING ARE SHOWN ON THESE DOCUMENTS, THE DESIGN–BUILD FIRE PROTECTION CONTRACTOR SHALL PROVIDE AS MANY SPRINKLER HEADS AS REQUIRED TO PROVIDE PROPER COVERAGE AND CITY REQUIREMENTS.

2. – PROVIDE PROPER COVERAGE ABOVE DROPPED CEILING CAVITY AS PER CITY REQUIREMENTS. COORDINATE ALL WORK WITH ARCHITECT

FIRE PROTECTION SYMBOL LIST

©1993 CALOR DESIGN GROUP LTD.

- SPRINKLER HEAD–UPRIGHT
- SPRINKLER HEAD–PENDANT/ MOUNTED SPRINKLER HEADS CONCEALED
- SPRINKLER HEAD–UPRIGHT W/GUARD
- EXISTING SPRINKLER PIPING AND HEADS
- NEW SPRINKLER PIPING
- EXISTING SPRINKLER PIPING & HEADS TO BE REMOVED
- SPRINKLER HEAD–SIDE WALL
- FLOW SWITCH INTERLOCKED W/FIRE ALARM SYSTEM
- OS & Y GATE VALVE WITH TAMPER SWITCH

(1) SEE NFPA 313, 4–14.2.3.3 EXCEPTIONS 1 & 2 AND 4–14.2.3.4 EXCEPTION. PROVIDE RESTRAINED HANGER SUPPORTS ON ALL NEW END OF BRANCHLINES AND ARM–OVERS.

(2) SPRINKLER MOUNTED IN CENTER OF SUSPENDED CEILING TILE

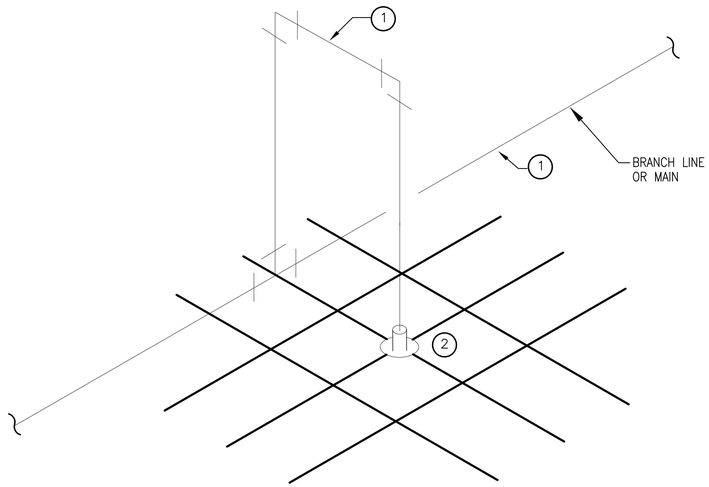

1 / fp2.1 TYPICAL RETURN BEND DETAIL

NOT TO SCALE

FIRE PROTECTION PERMIT NOTES	
1	**PROVIDE COMPLETE SHOP DRAWINGS WITH EQUIPMENT CUT-SHEETS AND CALCULATIONS, IF NECESSARY, TO THE CITY OF DES PLAINES, COMMUNITY DEVELOPMENT DEPARTMENT, BUILDING DIVISION, FOR REVIEWING AND APPROVAL, PRIOR TO CONSTRUCTION.**
2	**SUBMIT ANY CHANGES, MODIFICATIONS, OR ALTERATIONS TO THE AUTOMATIC FIRE SPRINKLER FIRE ALARM SYSTEM FOR SEPARATE REVIEW.**

DESIGN BUILD FIRE PROTECTION SCOPE		
	LOCATION	SCOPE TASK
1	NEW CEILING AT SAME HEIGHT AS EXISTING CEILING	PROTECT EXISTING SPRINKLER HEADS AND DROP PIPES DURING CONSTRUCTION. ADJUST HEADS AND PIPES FOR NEW TILE, DRYWALL OR OTHER CEILING FINISH.
2	NEW CEILING AT DIFFERENT HEIGHT AS EXISTING CEILING	PROTECT EXISTING SPRINKLER HEADS AND DROP PIPES DURING CONSTRUCTION. ADJUST HEADS AND PROVIDE ADDITIONAL DROP PIPES, IF NECESSARY, FOR NEW TILE, DRYWALL OR OTHER CEILING FINISH.
3	NEW CEILING IN NEW ROOM	PROTECT EXISTING SPRINKLER HEADS AND DROP PIPES DURING CONSTRUCTION. ADJUST HEADS AND PROVIDE ADDITIONAL DROP PIPES IF NECESSARY FOR NEW TILE, DRYWALL OR OTHER CEILING FINISH.
4	EXISTING SPRINKLER BRANCH AND PIPES	RE-USE ALL EXISTING SPRINKLER BRANCH PIPING AND MAIN PIPING. CONNECT NEW SPRINKLER HEADS ARE REQUIRED TO THE EXISTING PIPING. PER DESIGN-BUILD CONTRACTORS' CALCULATIONS, PROVIDE NEW AND/OR INCREASED SIZE THE BRANCH PIPING TO ACCOMMODATE INCREASE NUMBER AND/OR LOCATIONS OF SPRINKLER HEADS.
5	AS NOTED, THROUGH OUT PROJECT AREA	RELOCATE ALL SPRINKLER HEADS, BRANCH PIPES AND MAIN PIPES TO ACCOMMODATE NEW PARTITIONS, OBSTRUCTIONS, MECHANICAL, ELECTRICAL AND PLUMBING EQUIPMENT. RESTORE FULL SPRINKLER COVERAGE AT THE COMPLETION OF THE PROJECT.
6	FORMER GARAGE, GLYCOL, ANTI-FREEZE SPRINKLER ZONE	RETAIN EXISTING ANTI-FREEZE, SPRINKLER ZONE AND FITTINGS. SAVE AND STORE SYSTEM (GLYCOL) ANTI-FREEZE. RE-CHARGE NEW GARAGESTORAGE SPRINKLER PIPING SYSTEM TO RETAIN FREEZE PROTECTION. ELIMINATE SPRINKLER HEADS AND RECONNECT EXISTING SPRINKLER HEADS. BRANCH

DESIGN BUILD FIRE PROTECTION NOTES	
1	THE CONTRACTOR SHALL PROVIDE ALL LABOR, MATERIALS, EQUIPMENT, SERVICES, SUPERVISION, SHOP DRAWINGS AND FIRE DEPARTMENT AND INSURANCE UNDERWRITER SUBMITTALS NECESSARY FOR AND INCIDENTAL TO THE INSTALLATION OF THE SPRINKLER SYSTEM IN ALL PROJECT AREAS.
2	THESE FIRE PROTECTION DOCUMENTS SHALL BE USED BY THE FIRE PROTECTION CONTRACTOR TO SUBMIT A DESIGN-BUILT PROPOSAL FOR THIS PROJECT. THESE SPECIFICATIONS AND ANY ACCOMPANYING DRAWINGS AND DOCUMENTS ARE A GUIDELINE OF WHAT THE MINIMUM FIRE PROTECTION REQUIREMENTS ARE. THIS CONTRACTOR IS FULLY RESPONSIBLE FOR A COMPLETE CODE-APPROVED SPRINKLER SYSTEM TAKING INTO ACCOUNT ALL ARCHITECTURAL FEATURES AS DOCUMENTED AND AS FOUND IN THE FIELD. ALL NECESSARY WORK (MATERIALS, LABOR, ENGINEERING, ETC.), SHALL BE INCLUDED IN THE BASE BID.
3	THE AREA REQUIREMENTS SHALL BE MODIFIED BY VARIOUS NFPA 13 AND VILLAGE OF DES PLAINES BUILDING CODE CRITERIA INCLUDING SPRINKLER TYPE, CEILING HEIGHTS, ETC.
4	PROVIDE THE MINIMUM NUMBER OF SPRINKLER (AND FIRE ALARM) ZONES AS DETERMINED BY THE LOCAL AUTHORITIES AND CODE INTERPRETATIONS.
5	EXTEND EXISTING SPRINKLER SYSTEM SYSTEM TO COVER ALL NEW SPACES INCLUDING ALL CONCEALED AREAS.
6	INCLUDE THE FURNISHING OF ALL LABOR, MATERIALS, EQUIPMENT AND SERVICES NECESSARY FOR AND REASONABLY INCIDENTAL TO THE SATISFACTORY COMPLETION OF THE FIRE PROTECTION SYSTEM, WHICH SHALL INCLUDE TO PIPE SLEEVES, PIPE AND EQUIPMENT HANGERS AND SUPPORTS, PIPING, FITTINGS, FLANGES, VALVES, TEST CONNECTIONS, DRAINS, ETC., ALL AS REQUIRED AND/OR AS SPECIFIED.
7	SPRINKLERS: FURNISH AND INSTALL ALL SPRINKLER HEADS AS INDICATED ON THE DRAWINGS AND AS REQUIRED TO MEET CODE REQUIREMENTS. SPRINKLER HEADS SHALL BE OF THE AUTOMATIC NORMAL TEMPERATURE (UNLESS OTHERWISE SPECIFIED) SOLDER TYPE IN ACCORDANCE WITH NFPA BULLETIN NO. 13 (LATEST EDITION). HEADS SHALL BE OF THE TYPE AND FINISH AS INDICATED ON THE DRAWINGS AND IN THE SPECIFICATIONS, AND MUST MATCH EXISTING SPRINKLER HEADS.
8	UNLESS OTHERWISE INDICATED, ALL SPRINKLER HEADS SHALL BE ARRANGED SYMMETRICALLY WITHIN EACH ROOM OR SPACE. ALL SPRINKLER HEADS TO BE INSTALLED IN SUSPENDEDACOUSTICAL TILE CEILINGS OF ANY TYPE SHALL BE LOCATED AS INDICATED ON THE ARCHITECTURAL REFLECTED CEILING PLANS OR FIRE PROTECTION PLANS. SPRINKLERS SHALL BE PLACED IN THE CENTER OF CEILING TILE IN BOTH DIRECTIONS.
9	PROVIDE NEW SPRINKLER HEADS TO EXACTLY MATCH EXISTING WHEN REPLACING OR INSTALLING NEW IN THE SAME ROOM OR SPACE. ARCHITECT MUST APPROVE SPRINKLER TYPES IN NEW SPACES.
10	THE LOCATION OF ALL SPRINKLER HEADS, BRANCH AND MAIN PIPES MUST BE APPROVED IN WRITING BEFORE INSTALLATION. RELOCATE PIPING AND/OR SPRINKLER HEADS IF NOT APPROVED AS DIRECT BY THE ARCHITECT.

SPRINKLER SYSTEM PIPING & HANGER SCHEDULE[1]

PIPE DIAMETER	MIN. PIPE SIZE [2]	HANGER TYPE	MIN. ROD SIZE	ATTACHMENT METHOD	MIN. TRAPEZE SIZE [3]	MAX SPACING [4,5]	MAX. EOBL UNSUPPORTED LENGTH [6,7]
1" & 1.25"	SCH. 40	SWIVEL	3/8"	C–CLAMP/ ANCHOR BOLT	2"	12'–0"	3'–0" & 4'–0"
1.5"–2"	SCH. 40	SWIVEL	3/8"	C–CLAMP/ ANCHOR BOLT	2"	15'–0"	5'–0"
2.5"– 4"	SCH. 10	SWIVEL	3/8"	C–CLAMP/ ANCHOR BOLT	2.5"	15'–0"	5'–0"
5" – 6"	SCH. 10	CLEVIS	1/2"	C–CLAMP/ ANCHOR BOLT	3"	15'–0"	N/A
8" – 10"	SCH. 10	CLEVIS	1/2"	C–CLAMP/ ANCHOR BOLT	3.5"	15'–0"	N/A

1. SCHEDULE IS TYPICAL – APPROVED DEVIATIONS ARE PERMITTED ONLY IF ALLOWED BY AUTHORITY HAVING JURISDICTION.
2. GALVANIZED PIPING: SCH. 40 ONLY AND/OR FM APPROVED FOR 300 PSI & ASTM A653.
3. BASED ON 6'–6" MAX. SPAN FOR TRAPEZE MEMBER & FOLLLOWS MINIMUM SPEC. PIPE SCHEDULE
4. EXPANSION SHIELDS IN CONCRETE MAX SPACING IS 10'–0" FOR PIPE SIZES > 4"
5. LIMITED TO PER PIPE SECTION AND PER TWO BRANCH LINES MAX.
6. MAXIMUM UNSUPPORTED ARMOVER LENGTH IS 24" (COPPER 12").
7. IF SPRINKLER PRESSURE > 100 PSI:
   - –MAXIMUM END OF BRANCH LINE (EOBL) UNSUPPORTED LENGTH IS 12" STEEL PIPE; (COPPER 6")
   - –VERTICAL RESTRAINT REQUIRED AT EOBL (PROVIDE DETAIL)
   - –MAXIMUM UNSUPPORTED ARMOVER LENGTH IS 12"; (COPPER 6")
   - –HANGER SHALL BE WITHIN 12". OF LAST SPRINKLER ;

ARCHITECTURE PLANNING INTERIORS
LOHAN ANDERSON

DES PLAINES PUBLIC LIBRARY, OWNER
1501 ELLINWOOD ST., DES PLAINES, IL 60016

LOHAN ANDERSON, ARCH./INT.
401 N. MICHIGAN AVE., CHICAGO, IL 60611

CALOR DESIGN GROUP, LTD., MEP/FP
2217 N. WESTERN AVE., CHICAGO, IL 60647

C. S. ASSOCIATES, INC., STRUC.
4532 W. 103RD ST., OAK LAWN, IL 60453

N

REV.	DATE	ISSUE
	8-14-15	ISSUE FOR BID AND PERMIT

DATE SIGNED:

Des Plaines Public Library
Phased Improvements

PROJECT NUMBER: 13300

FIRE PROTECTION DETAILS

FP2.1